PEERLESS®

1944 75th Anniversary 2019

2019 PARTS CATALOGUE

575 PAGE AVE, PENTICTON, BC V2A 6P3
P: 250-492-0408 Ext 1 ~ TF: 1-866-657-2662 Ext. 1
parts@peerless.ca ~ *www.peerless.ca*

TABLE OF CONTENTS

AIR COMPONENTS 1
ELECTRICAL COMPONENTS 17
ELECTRICAL LOAD SCALES 23
BUNKS 43
- **LONG WOOD BUNKS & STAKES** 45
- **SHORT WOOD BUNKS & STAKES** 51

AXLES 55
SPRING SUSPENSIONS 78
TRUCK EQUIPMENT 84
MISC. 91
- **PREMIER** 93
- **LOAD SECUREMENT** 102
- **HOLLAND** 103

AIR COMPONENTS

250-492-0408 Ext 1
1-866-657-2662 Ext 1
parts@peerless.ca
www.peerless.ca

TRAILER AIR TANKS

TRAILER AIR TANKS

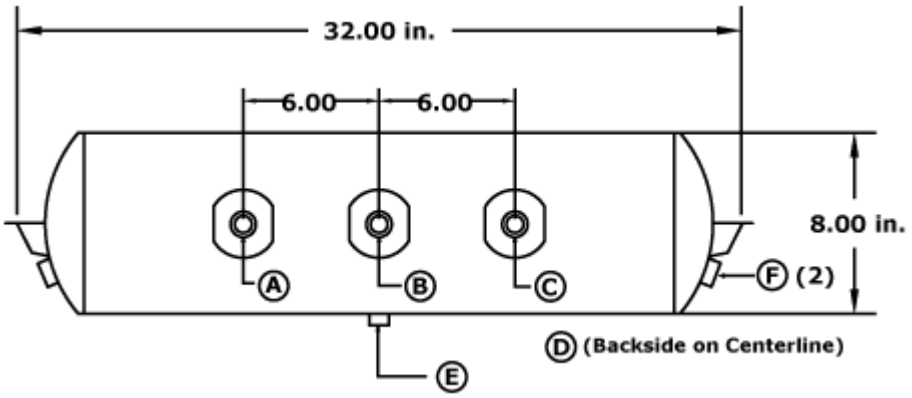

PART #	PEERLESS #	DESCRIPTION	PORT A	PORT B	PORT C	PORT D	PORT E	PORT F
HT8000	60143	8” X 32” (1425 CUBIC INCH) WITH END BRACKET		3/4”			1/4”	3/8”
HT8030	60144	8” X 32” (1425 CUBIC INCH) W/O END BRACKET	3/4”		3/4”		1/4”	3/8”

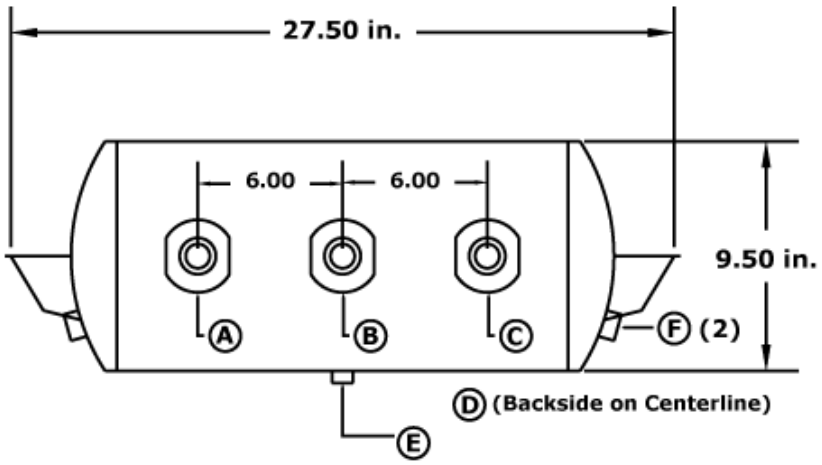

PART #	PEERLESS #	DESCRIPTION	PORT A	PORT B	PORT C	PORT D	PORT E	PORT F
HT9500	60145	9.5” X 27.5” (1488 CUBIC INC) WITH END BREAK		3/4”			1/4”	3/8”
HT9508	60146	9.5” X 27.5” (1488 CUBIC INC) WITH END BREAK		3/4”		3/4”	1/4”	3/8”
HT9511	60147	9.5” X 27.5” (1488 CUBIC INC) W/O END BREAK					1/4”	3/8”

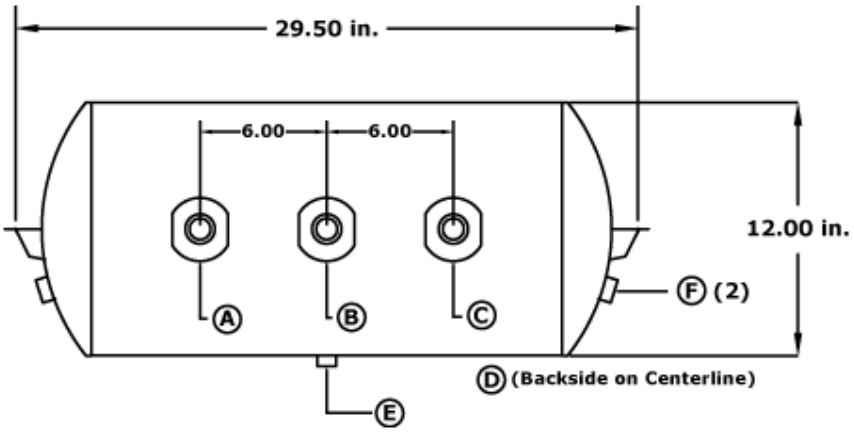

PART #	PEERLESS #	DESCRIPTION	PORT A	PORT B	PORT C	PORT D	PORT E	PORT F
HT1200		12” X 29’5” (2850 CUBIC INCH CAPACITY)		3/4”			1/4”	3/8”
HT1205		12” X 29’5” (2850 CUBIC INCH CAPACITY)		3/4”		3/4”	1/4”	3/8”
HT1237		12” X 29’5” (2850 CUBIC INCH CAPACITY)	1/2”		3/4”		1/4”	3/8”

All Ports are NPFT

AIR TANK BRACKETS

PART #	PEERLESS #	DESCRIPTION
91130		9” TANKS

PART #	PEERLESS #	DESCRIPTION
01285	91003-02	8” TANK

PART #	PEERLESS #	DESCRIPTION
96118	85637L	LH END MOUNT
96119	85637R	RH END MOUNT

PART #	PEERLESS #	DESCRIPTION
3420029	60334	HOSE HANGER

COMMON AIR FITTINGS

SPRING GUARD FITTING

PART #	PEERLESS #	SIZE
1493-6B	67177	3/8 – 1/4
1493-6C	67178	3/8 – 3/8
1493-6D	67179	3/8 – 1/2

HOSE COUPLER

PART #	PEERLESS #	SIZE
1492-6B		3/8 – 1/4
1492-6C		3/8 – 3/8
1492-6D		3/8 – 1/2

BRASS AIR FITTING

PART #	PEERLESS #	SIZE
1490-6	67175	3/8
1490-8	67176	1/2

BULKHEAD FITTING

PART #	PEERLESS #	SIZE
1497-DB		1/2 x 1/4
1496-DC		1/2 x 3/8
1495-C		3/8 x 3/8

TUBE COUPLER

PART #	PEERLESS #	SIZE
1462-4		1/4
1462-5		5/16
1462-6	67453	3/8
1462-8	67454	1/2
1462-10		5/8
1462-12		3/4

DRAIN COCK

PART #	PEERLESS #	SIZE
241-B	99271	1/4

MORE FITTINGS AVAILABLE UPON REQUEST

COILED AIR HOSES

PART #	PEERLESS #	DESCRIPTION
17215	60070	15’, RED + BLUE
17215-040		15’ X 48”
17220	60071	20’
17220-040		20’ “w” 40” LEAD
3-600-15CBR		15’
3-600-1540CBR		15’ X 40”
3-600-20CBR		20’

SLIDER COILED AIR

PART #	PEERLESS #	DESCRIPTION
1936-4-12	60051	1/4” X 12’
1936-4-15		1/4” X 15’

COMMON USE: PEERLESS TRUCK SLIDE

COLD TEMP & EXTENDABLE SERIES (TROMBONE & ARCTIC)

GLADHANDS

PART #	PEERLESS #	DESCRIPTION
12-010	60130	UNIVERSAL
12-010Y	60129	COMMON AIR, YELLOW
12-008	60128	EMERG, RED
12-006	60127	SERVICE, BLUE

PART #	PEERLESS #	DESCRIPTION
36156	60132	SHUTOFF GLADHAND, BLUE
36256	60133	SHUTOFF GLADHAND, RED
	60134	SHUTOFF GLADHAND, YELLOW

PART #	PEERLESS #	DESCRIPTION
12-206	60131	QUICK RELEASE, BLUE

PART #	PEERLESS #	DESCRIPTION
12-136		DUMMY, SERVICE, BLUE
12-138		DUMMY, EMERG, RED

PART #	PEERLESS #	DESCRIPTION
9411	60136	CHAIN MOUNT

PART #	PEERLESS #	DESCRIPTION
9410	60135	SURFACE MOUNT

SUSPENSION LEVELING HEIGHT CONTROL VALVES

PART #	PEERLESS #	DESCRIPTION	PART #	PEERLESS #	DESCRIPTION
52341-Q115	60198	HEIGHT CONTROL VALVE	90054007		HEIGHT CONTROL VALVE

PART #	PEERLESS #	DESCRIPTION	PART #	PEERLESS #	DESCRIPTION
90554241		RIDE HEIGHT VALVE	90554271		HEIGHT CONTROL W/DUMP
90555105		HALDEX, 1/4NPT PORTS	90555106	60199	HEIGHT CONTROL W/DUMP

PART #	PEERLESS #	DESCRIPTION	PART #	PEERLESS #	DESCRIPTION
SRK168	60209	LINKAGE KIT 4 1/2 - 20	6310CGAE04	60200	HEIGHT CONTROL W/DUMP

PART #	PEERLESS #	DESCRIPTION	PART #	PEERLESS #	DESCRIPTION
SRK205	60210	LINKAGE KIT	90054630	60207	LINKAGE END RUBBER ADJ 1/4

SPECIAL AIR VALVES

CONTACT PEERLESS PARTS DEPARTMENT FOR ANY OF YOU TRAILER PART NEEDS

PART #	PEERLESS #	DESCRIPTION
V8		4 WAY 2 POS.

BALL VALVE

PART #	PEERLESS #	DESCRIPTION
BV2101-B	60062	1/4” PIPE
BV2101-C	60063	3/8” PIPE
BV2101-D	60064	1/2” PIPE

3 WAY PILOT VALVE

PART #	PEERLESS #	DESCRIPTION
90054079		3-WAY PILOT VALVE
90554615	60171	3-WAY PILOT VALVE

PRESSURE PROTECTION VALVE

PART #	PEERLESS #	DESCRIPTION
90554107		PRESSURE PROTECTION

MANUAL DUMP VALVE

PART #	PEERLESS #	DESCRIPTION
90054088		MANUALLY OPERATED DUMP

SAFETY POP-OFF VALVE

PART #	PEERLESS #	DESCRIPTION
112407		175 PSI POP OFF VALVE, 1/4"

REGULATOR VALVE

PART #	PEERLESS #	DESCRIPTION
R07-100-RNKA	60251	REGULATOR 1/4”

REGULATOR GAUGE

PART #	PEERLESS #	DESCRIPTION
R21-02-000	60250	REG,160PSI
PROPORTIONAL AIR		

AIR GAUGE – OIL FILLED

PART #	PEERLESS #	DESCRIPTION
ENF6211	60218	AIR,0-100 PSI, 1/4" NPT
ENF6211-160	60219	AIR,0-160 PSI, 1/4" NPT
ENF6211-BACKMONT	60220	AIR, 0-100 PSI, RR, 1/4" NPT

AIR GAUGE – LIQUID FILLED

PART #	PEERLESS #	DESCRIPTION
PG-100SG25	60089	AIR, 0-100 PSI, 1/4" NPT

GAUGE BOX

Stainless Available

PART #	PEERLESS #	DESCRIPTION
5-4	63304	8 X 6 X 4
5-5	63303	10 X 8 X 4

3 WAY MANUAL AIR VALVE

PART #	PEERLESS #	DESCRIPTION
125V-3-10-22		VALVE, HUMPHREY, 1/8
250V-3-10-21		VALVE, HUMPHREY, 1/4
501-4A		VALVE, HUMPHREY, 1/2

HYDRAULIC GOOSENECK CONTROL VALVE

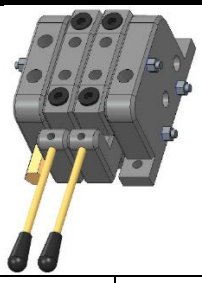

PART #	PEERLESS #	DESCRIPTION
122398		CONTROL VALVE, 2 SPOOL
123127		CONTROL VALVE, 4 SPOOL

SOLENOIDS

PART #	PEERLESS #	DESCRIPTION
90054074		12V VALVE, NC

PART #	PEERLESS #	DESCRIPTION
180003-112-0003		MAC VALVE
180003-112-0035		MAC MV4 PILOTED

PART #	PEERLESS #	DESCRIPTION
811CPM602CC152		ELECTRIC/AIR
E-320-12-VDC		ELECTRIC OVER AIR

BENDIX / HALDEX / WILLIAMS AIR VALVES

PART #	PEERLESS #	DESCRIPTION	PART #	PEERLESS #	DESCRIPTION
281865	60239	RE6, RELAY EMERG	986-195		ADJ 1/4 FPT PORT
281865C		RE6 CLONE, RELAY EMERG	989-109		ADJ 1/4 FPT PORT
065451	60240	RE6NC, NON-CHARGING			

PART #	PEERLESS #	DESCRIPTION	PART #	PEERLESS #	DESCRIPTION
102626		R12, RELAY VALVE	279000		TRCTR PROTECTION. VALVE
102626c		R12C CLONE, RELAY VALVE			

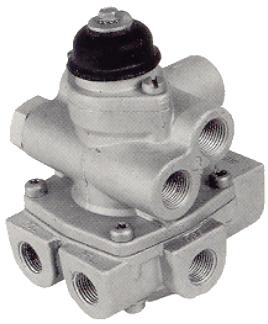

PART #	PEERLESS #	DESCRIPTION	PART #	PEERLESS #	DESCRIPTION
102831		SR5 VALVE	12360X		VALVE, TASK 225
065437		BENDIX SR5 VALVE	12360X-CORE		CORE, TASK VALVE

PART #	PEERLESS #	DESCRIPTION	PART #	PEERLESS #	DESCRIPTION
103010		R14, RELAY VALVE	12353		TUBE, X-BRACE

PART #	**PEERLESS #**	**DESCRIPTION**	**PART #**	**PEERLESS #**	**DESCRIPTION**
229859		**QUICK RELEASE VALVE**	**N4304AC**		**HALDEX MULTI VALVE**
PART #	**PEERLESS #**	**DESCRIPTION**	**PART #**	**PEERLESS #**	**DESCRIPTION**
289714		**ANTI-COMPOUNDING QR VALVE**	**229635**		**SWITCH, AIR TOGGLE**
PART #	**PEERLESS #**	**DESCRIPTION**	**PART #**	**PEERLESS #**	**DESCRIPTION**
289144		**LQ4 LIMITING VALVE**	**275491**		**D2 GOVERNOR**
			275491C		**CORE – D2 GOVERNOR**
			275491V		**VLV – D2 GOVERNOR**
PART #	**PEERLESS #**	**DESCRIPTION**	**PART #**	**PEERLESS #**	**DESCRIPTION**

276567		PP1 DASH VALVE	112407		175 PSI POP OFF VALVE, 1/4”

SEALCO VALVES
SPRING BRAKE CONTROL VALVES

PROTECTED RESERVOIR SYSTEM

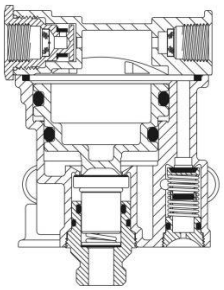

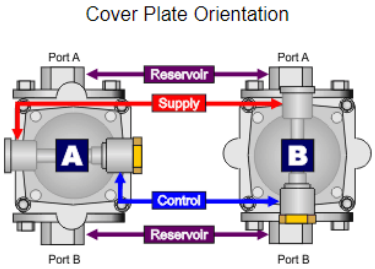

PART #	PEERLESS #	SUPPLY PORT	CONTROL PORT	RESERVOIR PORT A	RESERVOIR PORT B	DELIVER PORTS	COVER PLATE ORIENTATION
110170-A		3/8”	3/8”	1/2”	1/2”	3/8”	STANDARD (A)
110191-A		3/8”	3/8”	3/8”	1/2”	3/8”	90 DEGREE (B)

STANDARD

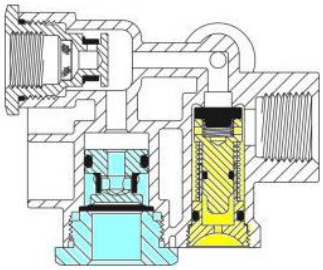

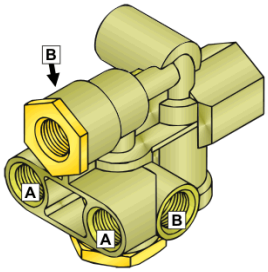

PART #	PEERLESS #	SUPPLY PORT (NPT)	CONTROL PORT (NPT)	RESERVOIR PORT (NPT)	DELIVERY PORTS (NPT)	MOUNTING
110500-A	60230	3/8”	3/8”	1/2"	3/8”	

ENHANCED

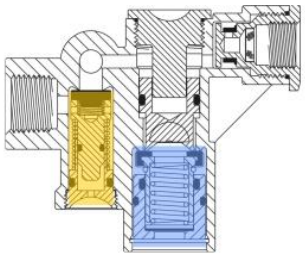

PART #	PEERLESS #	SUPPLY PORT (NPT)	CONTROL PORT (NPT)	RESERVOIR PORT (NPT)	DELIVERY PORTS (NPT)	NOTES
110700-A	60231	3/8”	3/8”	1/2"	3/8”	SERVICE BRAKE PRIORITY

SERVICE RELAY VALVES

FOUR DELIVERY PORT

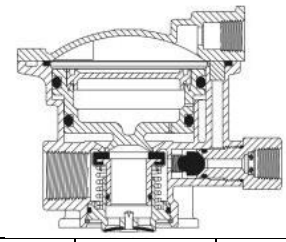

PART #	PEERLESS #	AUXILIARY SUPPLY (NPT)	CONTROL PORT (NPT)	RESERVOIR PORT (NPT)	DELIVERY PORTS (2) (NPT)	RATIO FEATURE	*SAE J1860 TAG	NOMINAL CRACK PRESSURE	PLUG UNIT
110139-A	60231	3/8”	3/8”	3/4"	3/8”	NOTE #1	RD045	4.5	110143

NOTE #1: These valves include a Ratio Feature. DO NOT use on converter dollies, lift axles, or trailer turntable axles. The preferred application is one (1) valve to control two (2) axles.

CONTROL LINE (BOOSTER) MINI VALVE)

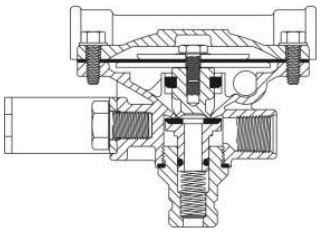

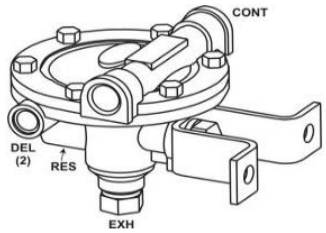

PART #	PEERLESS #	CONTROL PORT (NPT)	RESERVOIR PORT (NPT)	DELIVER PORTS (2) (NPT)	*SAE J1860 TAG	NOMINAL CRACK PRESSURE	NOTES
3100-A		1/4"	3/8”	1/4”	RB025	2.5 PS	INCLUDES BRACKET

TWO PORT

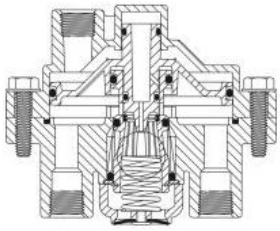

PART #	PEERLESS #	CONTROL PORT (NPT)	RESERVOIR PORT (NPT)	DELIVER PORTS (2) (NPT)	*SAE J1860 TAG	NOMINAL CRACK PRESSURE	**MOUNTING
110360-A	60244	3/8”	1/2"	3/8”	RV015	1.5 PSI	6003 OR 6006 NIPPLE

FOUR DELIVERY PORT

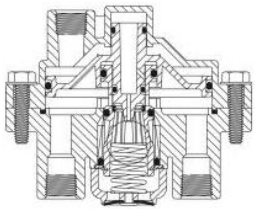

PART #	PEERLESS #	CONTROL PORT (NPT)	RESERVOIR PORT (NPT)	DELIVER PORTS (2) (NPT)	*SAE J1860 TAG	NOMINAL CRACK PRESSURE	**MOUNTING
110380-A	60245	3/8”	3/4"	3/8”	RV015	1.5 PSI	6003 OR 6006 NIPPLE

**

6003

6006

NUMBER	NPT	NPT	SEALANT	HEX
6003	1/2	3/4	NO	NO
6006	3/4	3/4	NO	YES

RELAY EMERGENCY VALVE

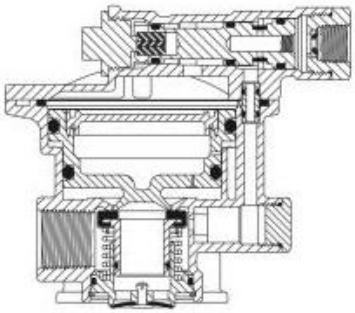

PART #	PEERLESS #	SUPPLY PORT (NPT)	CONTROL PORT (NPT)	RESERVOIR PORT (NPT)	DELIVERY PORTS (4) (NPT)	SUPPLY OUTLET (NPT)	RATIO FEATURE	*SAE J1860 TAG	NOMINAL CRACK PRESSURE
110205-A		1/4"	1/4"	3/4"	3/8”	NONE	NOTE #1	RE045	4.5

NOTE #1: These valves include a Ratio Feature. DO NOT use on converter dollies, lift axles, or trailer turntable axles. The preferred application is controlling tandem axles.

CONTROL LINE VALVE BOOSTER VALVE

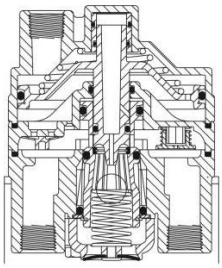

PART #	PEERLESS #	CONTROL PORT (NPT)	RESERVOIR PORT (NPT)	DELIVER PORTS (2) (NPT)	*SAE J1860 TAG	NOMINAL CRACK PRESSURE	NOTES
110580-A	60168	3/8”	1/2"	3/8”	RB000	0 PSI	INCLUDES BRACKET

VALVE TYPE CODES

- RE = RELAY EMERGENCY VALVE
- RV = RELAY VALVE
- RR = RATIO RELAY VALVE
- RD = DECAYING RATIO RELAY VALVE
- RB = BOOSTER RELAY VALVE
- QR = QUICK RELEASE VALVE
- BV = BRAKE FOOT VALVE
- TP = TRACTOR PROTECTION VALVE
- XX = OTHER

VALVE TAGS	
RB000	110570 110571 110690 110606 110580 110582 110588 110605 110790
RB000D	110570 110571 110690 110606
RB000T	110580 110582 110588 110605 110790
RD045	110139 110600
RD055	110584
RD060	110575
RE015	A1000S
RE045	110200 110205 110460 110470 110475 11038
RE045C	110475
RE045N	110338
RE085	110459
RV015	110380 110360 110385 110365
RV025	3100
RV040	110410 110412 110415 110416 110615 110197 110198 110199 110275
RV045	110450
RV055	110488 9125 110207 110228 110487
RV060	110507
QR010	2000D-3/8 2000D-1/2 200000 200001 200002 200003 200004 200005
QR045	2000B-3/8 2000B-1/2
QR100	2000C-3/8 2000C-1/2

HAND CONTROL VALVE

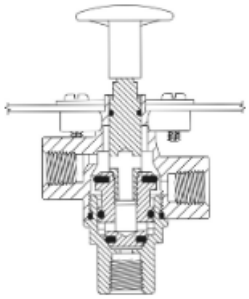

PART #	PEERLESS #	NAME PLATE	KNOB	INLET PORT (NPT)	OUTLET PORT (NPT)	EXH. PORT (NPT)	COMMENTS
17600B-A	60158	826	13	1/4"	1/4"	1/4"	DOLLY & TRAILER PARK BRAKE RELEASE

NAME PLATE

KNOB

AIR TOGGLE VALVE

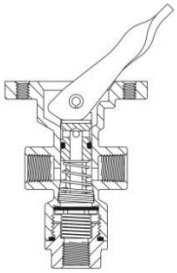

PART #	PEERLESS #	NAME PLATE	INLET PORT (NPT)	OUTLET PORT (NPT)
21600-A		821	1/8”	1/8”

NAME PLATE

SUPPLY LINE FILTER

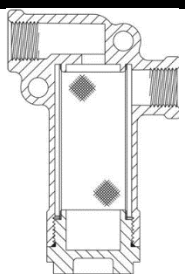

PART #	PEERLESS #	INLET PORT (NPT)	OUTLET PORT (NPT)
2550-A		3/8”	3/8”

		DESCRIPTION
2550-5-A		PLUG UNIT ASSEMBLY

EMERGENCY CONTROL VALVE

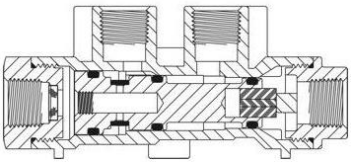

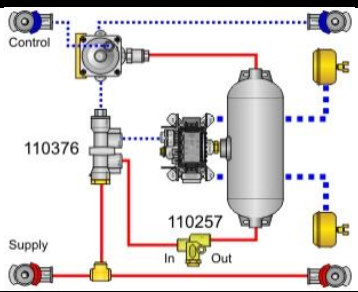

PART #	PEERLESS #	SUPPLY PORT (NPT)	CONTROL PORT (NPT)	RESERVOIR PORT (NPT)	DELIVERY PORT (NPT)
110376-A		3/8”	3/8”	3/8”	3/8”

EMERGENCY RELEASE VALVE

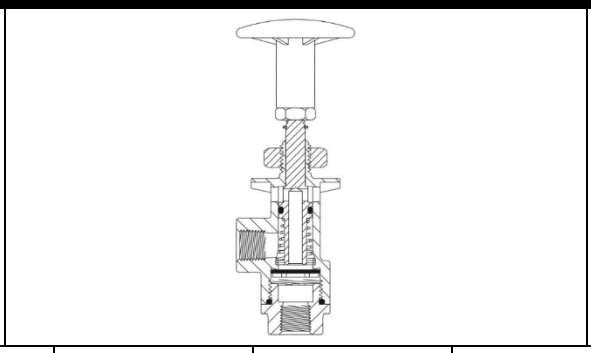

KNOB

PART #	PEERLESS #	KNOB	INLET PORT (NPT)	OUTLET PORT (NPT)	MOUNTING THREAD SIZE	APPLICATION
342502-A		13-S	1/8”	1/8”	7/16”	STARTER CONTROL

PRESSURE RELEASE VALVE

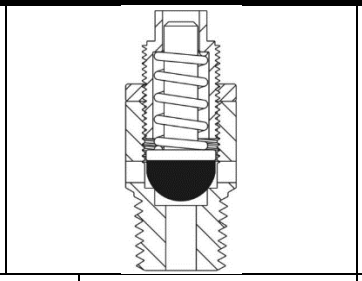

PART #	PEERLESS #	PORT (NPT)	PRESSURE SETTING
110627-A		3/8”	FACTORY SET AT 150 PSI

TWO WAY CHECK VALVE

PART #	PEERLESS #	INLET PORTS (NPT)	OUTLET PORT (NPT)
320100-A	60283	3/8”	3/8”

ONE WAY CHECK VALVE (FEMALE NPT FITTINGS)

PART #	PEERLESS #	INLET PORT (NPT)	OUTLET PORT (NPT)
2200 1/4-A		1/4”	1/4”
2200 1/2-A		1/2"	1/2"
2200 3/4-A		3/4"	3/4"

ONE WAY CHECK (FEMALE AND MALE NPT FITTINGS)

PART #	PEERLESS #	INLET PORTS (NPT)	OUTLET PORT (NPT)
10200 3/8-A		3/8”	3/8”
10200 1/2-A		1/2"	1/2"
10200 3/4-A		3/4"	3/4"

EMERGENCY CONTROL PRESSURE PROTECTION VALVE

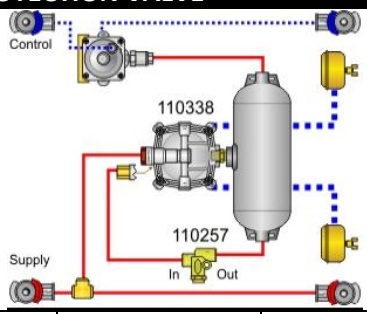

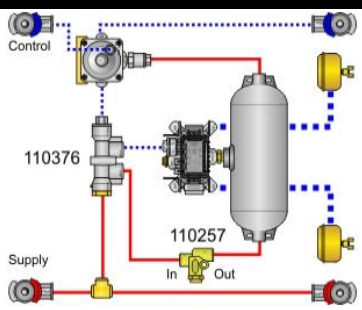

PART #	PEERLESS #	INLET PORT (NPT)	OUTLET PORT (NPT)	NOMINAL CLOSING	NOTES
110257-A	60164	3/8”	3/8”	70 PSI	DOES NOT INTERCHANGE WITH OTHER PRESSURE PROTECTION VALVES DUE TO THE SPECIAL BACK FLOW FEATURE

PRESSURE PROTECTION VALVE WITH INTERNAL CHECK

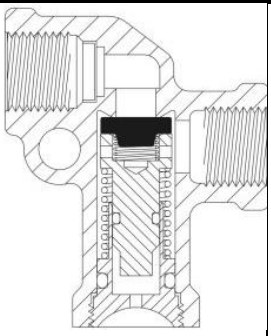

PART #	PEERLESS #	INLET PORT (NPT)	OUTLET PORT (NPT)	NOMINAL CLOSING
140270-A	60162	3/8”	3/8”	60 PSI
140280-A	60163	3/8”	3/8”	70 PSI

RELAY VALVE

PART #	PEERLESS #
4721950310	60193

ABS VALVE

2S/1M

PART #	PEERLESS #
4005001010	68185

2S/2M

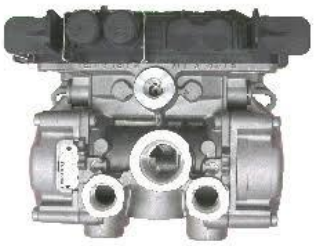

PART #	PEERLESS #
4005001020	

4S/2M

PART #	PEERLESS #
4005001030	60187

4S/3M

PART #	PEERLESS #
4S/2M + 4721950330	60192

SENSOR LEAD

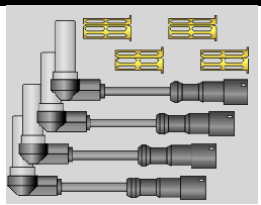

PART #	DESCRIPTION	PART #	DESCRIPTION
4497130300	3 METER	4497130500	5 METER
4497130700	7 METER	4497130900	9 METER
4497131200	12 METER		

ABS POWER CABLE

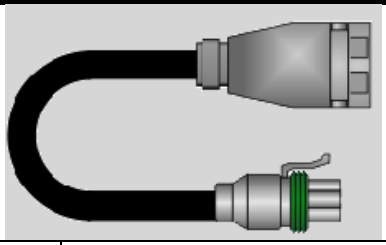

PART #	DESCRIPTION
4493260050	20” ‘W’ PACKARD CONNECTOR POWER CABLE
4493260100	40” ‘W’ PACKARD CONNECTOR POWER CABLE
4493260300	10’ ‘W’ PACKARD CONNECTOR POWER CABLE
4493260400	13’ ‘W’ PACKARD CONNECTOR POWER CABLE
4493260470	15’ ‘W’ PACKARD CONNECTOR POWER CABLE
4493260600	20’ ‘W’ PACKARD CONNECTOR POWER CABLE

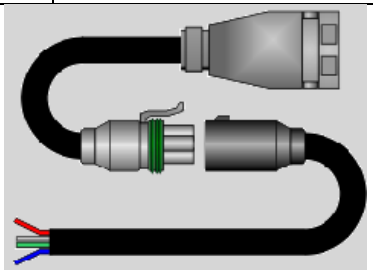

PART #	DESCRIPTION
PEC408 & 4493260050	10’ ‘W’ BLUNT END CONNECTOR PWR CBL
PEC408 & 4993260100	11’ ‘W’ BLUNT END CONNECTOR PWR CBL
PEC408 & 4493260050	37’ ‘W’ BLUNT END CONNECTOR PWR CBL
PEC435 & 4493260100	38’ ‘W’ BLUNT END CONNECTOR PWR CBL
PEC448 & 4493260050	50’ ‘W’ BLUNT END CONNECTOR PWR CBL
PEC448 & 4493260100	51’ ‘W’ BLUNT END CONNECTOR PWR CBL
PEC464 & 4493260050	66’ ‘W’ BLUNT END CONNECTOR PWR CBL
PEC464 & 4493260100	67’ ‘W’ BLUNT END CONNECTOR PWR CBL

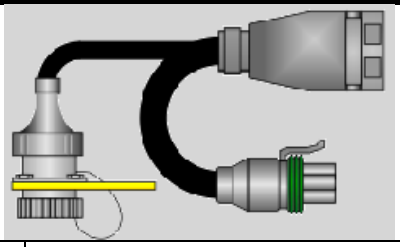

PART #	DESCRIPTION
4493641420	16” ‘W’ 10’ DIAGNOSTIC LEAD POWER CABLE
4493641430	40” ‘W’ 10’ DIAGNOSTIC LEAD POWER CABLE
4493641500	13’ ‘W’ 10’ DIAGNOSTIC LEAD POWER CABLE

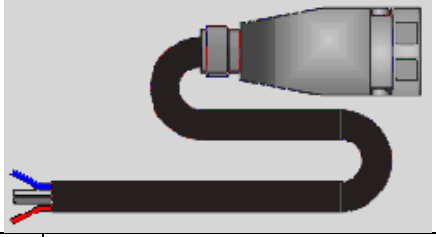

PART #	DESCRIPTION
4493280300	10’ BLUNT END CABLE POWER CABLE

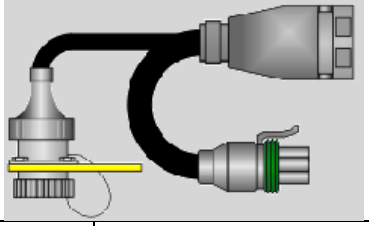

PART #	DESCRIPTION
PEC464 & 4493641520	16.4’ ‘W’ 10’ DIAGNOTIC LEAD PWR CBL
PEC464 & 4493641530	19.7’ ‘W’ 10’ DIAGNOTIC LEAD PWR CBL

ELECTRICAL COMPONENTS

TRUCK AND TRAILER ELECTRICAL

SOCKET

PART #	
15-720	7 WAY
15-600	6 WAY
15-400	4 WAY

PLUG

PART #	
15-730	7 WAY
15-630	6 WAY
15-430	4 WAY

BOOT

PART #	
15-740	7 WAY
15-640	4/6 WAY

COIL ELECTRICAL CORD

PART #	
7ETB522MG	15 FT
7STS622MG	20 FT
7ATG522MG	ABS 15 FT
7ATG622MG	ABS 20 FT

CIRCUIT BREAKER

PART #	
15-760	NO BREAKERS
15-761	15 AMP
15-762	20 AMP
15-763	30 AMP

PLASTIC AIR LINE

PART #	
1485-4	1/4”
1485-6	300
1485-8	1/2”

TERMINAL STRIP

PART #
76-2111

KILL SWITCH

PART #
51-302

JUNCTION BOX 7 POLE

PART #
22010

JUNCTION BOX 12 POLE

PART #
Y211240

CABLE TIES

PART #	
BTN055	5 3/4”
BTN075	7 1/2”
BTN011	11”
BTN015	15”
BTN145	14 1/2”
BTN145HD	14 1/2” HD

ULTRA FLEX TRAILER CABLE

TEMP -65C 100’/250’/500’ ROLLS

PART #	
724A2	2/14 ARCTIC FLEX
734A	3/14 ARCTIC FLEX
744A	4/14 ARCTIC FLEX
764A	6/14 ARCTIC FLEX
774A	7/14 ARCTIC FLEX
76412A	6/14 + 1/12 ARCTIC FLEX
742208A1	ABS CABLE

TRUCK-LITE LIGHTING PRODUCTS

4” STOP/TURN/TAIL LAMPS

PART #	DESCRIPTION	
40202R	4” STOP/TURN/TAIL LAMP RED	
40202Y	4” TURN/TAIL LAMP YELLOW	
40204	4” BACK-UP CLEAR	
40209R	4” STOP/TURN/TAIL LAMP RED 24V	
40209Y	4” TURN/TAIL LAMP YELLOW 24V	
40222R	4” STOP/TURN TAIL LAMP	FLANGE MOUNT
40282R	4” STOP/TURN TAIL LAMP	ECONOMY
40285R	4” STOP/TURN TAIL LAMP	REFLECTORIZED
40248R	4” STOP/TURN/TAIL LAMP RED	SUPER 40 3 YEAR WARRANTY

PIG TAIL	GROMMET	FLANGE MOUNT	METAL MODULE L/R	MODULE C/W HARNESS
PART #	PART #	PART #	PART #	PART #
94993	40700	40720	L= 40756	L = 40746
	GR4001		R= 40757	R = 40747

6” STOP/TURN/TAIL LAMPS

PART #	DESCRIPTION
60202R	6” OVAL STOP/TURN/TAIL LAMP RED
60202Y	6” OVAL STOP/TURN/TAIL LAMP YELLOW
60204	6” OVAL BACK-UP CLEAR
60207R	6” OVAL STOP/TURN/TAIL RED 24V
60207Y	6” OVAL STOP/TURN/TAIL YELLOW 24V
60215Y	6” OVAL SIDE/TURN/MARKER LAMP YELLOW

PIG TAIL 2 WIRE	PIG TAIL 3 WIRE	GROMMET	STAINLESS BEZEL	MOUNTING BRACKET
PART #	PART #	PART #	PART #	PART #
94992	94993	60700	60721	60720
		GR2501		

50 SERIES SUPER HARNESS SYSTEM

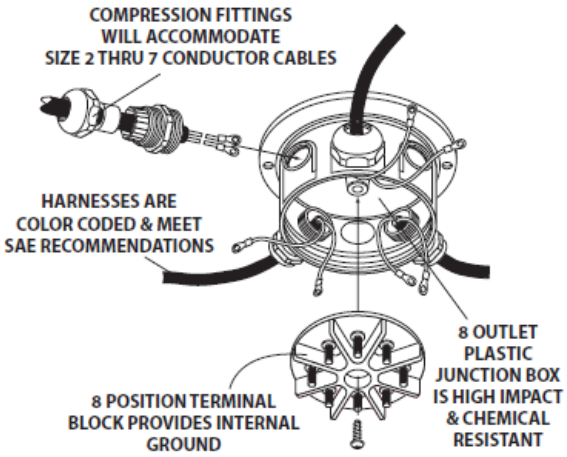

PART #
COMPRESSION FITTINGS
50840 FOR 2 CONDUCTOR 3/8” ID
50841 FOR 3 CONDUCTON 1/2” ID
50242 FOR 7 CONDUCTOR 3/4”
50843 FOR 1 CONDUCTOR 5 HOLES
50846 FOR 3 CONDUCTOR FLAT CABLE
50845 JAM NUT
50400 JUNCTION BOX
CONTAINS
50800 JUNCTION BOX
50816 CAP
50830 FILLER PLUGS

TRUCK-LITE LIGHTING PRODUCTS

CLEARANCE & MARKING LAMPS

PART #	DESCRIPTION
30200R	2” SEALED LAMP RED
30200Y	2” SEALED LAMP YELLOW
30200C	2” SEALED LAMP CLEAR
30257Y	2” SEALED LAMP YELLOW ABS
10205R	2 1/2” SEALED REFLECTORIZED LAMP RED
10205Y	2 1/2” SEALED REFLECTORIZED LAMP YELLOW
10205C	2 1/2’ SEALED LAMP CLEAR
10212 Y	2 1/2” SEALED LAMP YELLOW ABS
15200R	1 X 3” SEALED LAMP RED
15200Y	1 X 3” SEALED LAMP YELLOW
15200C	1 X 3” SEALED CLEAR LAMP
15208	1 X 3” SEALED LAMP LICENCE
15203Y	1 X 3” SEALED LAMP YELLOW ABS
19200R	1 X 4” SEALED LAMP RED
19200Y	1 X 4” SEALED LAMP YELLOW
19200C	1 X 4” SEALED LAMP CLEAR
19205Y	1 X 4” SEALED LAMP YELLOW ABS
30201R	2” BEEHIVE LAMP RED
30201Y	2” BEEHIVE LAMP YELLOW
10203R	2 1/2” BEEHIVE LAMP RED
10203Y	2 1/2” BEEHIVE LAMP YELLOW
21002R	2” X 6” SUPER 21 CLEARANCE LAMP RED
21002Y	2” X 6” SUPER 21 CLEARANCE LAMP YELLOW

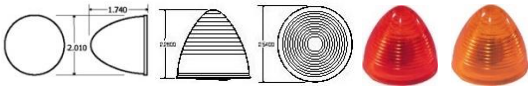

LICENSE LIGHT GROMMET

PART #	DESCRIPTION
30700	2” GROMMET
30702	2” GROMMET ENCL. BACK
10700	3” GROMMET
10702	3” GROMMET ENCL. BACK

LICENCE LAMPS

PART #
26330

PART #
15011

PART #
17001

BRACKETS

FOR 1500	FOR 19200	FOR 30200	FOR 10205		
				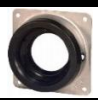	
PART #	PART #	PART #	PART #	PART #	PART #
15405	19721	30728	10729	10722	10725

3 LIGHT ID BAR

PART #	DESCRIPTION	PART #	DESCRIPTION	PART #	DESCRIPTION
15741R	STAINLESS 6” CTR	30740R	2” LAMPS	10744R	2 1/2“ LAMPS
15745R	PLASTIC 6” CTRS	30742R	9” CENTRES	10742R	9” CENTRES

TRUCK-LITE LED LIGHTS

TRUCK-LITE 6” DIODE 4” LED LAMP KIT

PART #	DESCRIPTION
44302R	LAMP
GR4001	GROMMET ENCLOSED BACK
94706	ADAPTER
94707-TRK	PIGTAIL LED TO WIRE

44030R

TRUCK-LTE 42 DIODE 4” LED LAMP KIT

PART #	DESCRIPTION
44022R	RED LAMP
44203Y	YELLOW LAMP

44001R
44001Y

TRUCK-LITE 42 DIODE LED 6” OVAL LAMP KIT & TRUCK-LITE 26 DIODE LED 6” OVAL LAMP KIT

PART #	DESCRIPTION
60250R	RED LAMP
60275Y	YELLOW LAMP
60700	GROMMET
94706	ADAPTER

60050R
60080Y

LED CLEARANCE LIGHT KIT

PART #	DESCRIPTION
30250R	RED LAMP
30250Y	YELLOW LAMP
30700	GROMMET
93745	ADAPTER

30050R
30050Y

2” LED CLEARANCE LIGHT KIT

PART #	DESCRIPTION
10250R	RED LAMP
10250Y	YELLOW LAMP
10700	GROMMET
93745	ADAPTER

10050R
10050Y

LED CLEARANCE LIGHT KIT 19006R

PART #	DESCRIPTION
19032R	RED LAMP
19032Y	YELLOW LAMP
19721	MOUNT

19206Y

35 LED CLEARANCE LIGHT KIT

PART #	DESCRIPTION
35200R	RED LAMP
35200Y	YELLOW LAMP

35001R
35001Y

TRUCK-LITE LED LIGHTS		
TRUCK-LITE SIGNAL – STAT LED		
PART #	**DESCRIPTION**	
1050-TRK	**2 1/2" RED**	
1050A	**2 1/2" AMBER**	
1051-TRK	**2 1/2" RED – CLEAR LENS**	
10510A	**2 1/2" AMBER – CLEAR LENS**	
1560	**15 SERIES RED**	
1560A	**15 SERIES AMBER**	
1561	**15 SERIES RED – CLEAR LENS**	
1561A	**15 SERIES AMBER – CLEAR LENS**	
1960	**19 SERIES RED**	
1960A	**19 SERIES AMBER**	
1961	**19 SERIES RED – CLEAR LENS**	
1961A	**19 SERIES AMBER – CLEAR LENS**	
3050	**2" RED**	
3050A	**2" AMBER**	
3051	**2" RED – CLEAR LENS**	
3051A	**2" AMBER – CLEAR LENS**	
4050R	**4" RED**	
4050A	**4" AMBER**	
4050c	**4" CLEAR**	
4061	**4" RED – CLEAR LENS**	
4061A	**4" AMBER – CLEAR LENS**	
6050	**6" RED**	
6050A	**6" AMBER**	
6051	**6" RED – CLEAR LENS**	
6051A	**6" AMBER – CLEAR LENS**	
4060C	**4" ROUND BACK-UP LIGHTS**	
6060C	**6" OVAL BACK-UP LIGHTS**	

ELECTRICAL LOAD SCALES

250-492-0408 Ext 1
1-866-657-2662 Ext 1

parts@peerless.ca
www.peerless.ca

BLANK PAGE

LONG LOG

VPG SI ONBOARD LONG LOGGER SCALE SYSTEM

	COMPONENT ITEM	DESCRIPTION	QUANTITY
KIT	9100595	STANDARD 26” TRUCK & TRAILER LONG LOG SHEAR BEAM (COMPLETE KIT)	1 (KIT)
PART	2800273	BOLTS (1 1/8” X 3 1/4”) BOLTS GRADE 8, NF	8
PART	2800476	WASHERS	8
PART	6300090-01	BEARING BLOCKS	8
PART	7100173-01	TRUCK CABLE, 40’	1
PART	8100152-20	POWER CABLE, 20’	1
PART	8100187-05QC	9100 TRANSMITTER AMP	2
PART	8100194-55	TRAILER REACH CABLE, 55’	1
PART	8100198-37	TRUCK TO TRAILER CABLE, 37’	1
PART	8300755-15RW	26” SHEAR-BEAM LOAD CELL / MOUNTING HARDWARE 8300755-25	4
PART	8500570-15	9100 INDICATOR METER	1

SHEAR-BEAM & KIWI MOUNTING KIT 7300017

	COMPONENT ITEM	DESCRIPTION	QUANTITY
KIT	7300017	SHEAR-BEAM & KIWI ONLY, LOAD CELL MOUNTING KIT (COMPLETE KIT)	1 (KIT)
PART	6300090-01	BEARING BLOCKS	2
PART	2800476	WASHERS	2
PART	2800273	BOLTS (1 1/8” X 3 1/4”) BOLTS GRADE 8, NF	2

**** 1 KIT REQUIRED PER LOAD CELL**

REPLACEMENT PIGTAILS (CABLE ENDS)

	COMPONENT ITEM	DESCRIPTION
A	8100191-02	TRANSMITTER LEAD PIGTAIL
B	8100195-03	3 PIN PIGTAIL, MATES TO TRANSMITTER
C	8100196-03	4 PIN, FEMALE BERG STYLE MOLDED SOCKET
D	8100228-03	4 PIN, MALE MOLDED END, MATES W/8100196-03
E	2100249	7 PIN MALE PLUG, MATES TO 9100 2 CH METER
F	2100297	4 PIN LOAD CELL CONNECTOR

LONG LOG

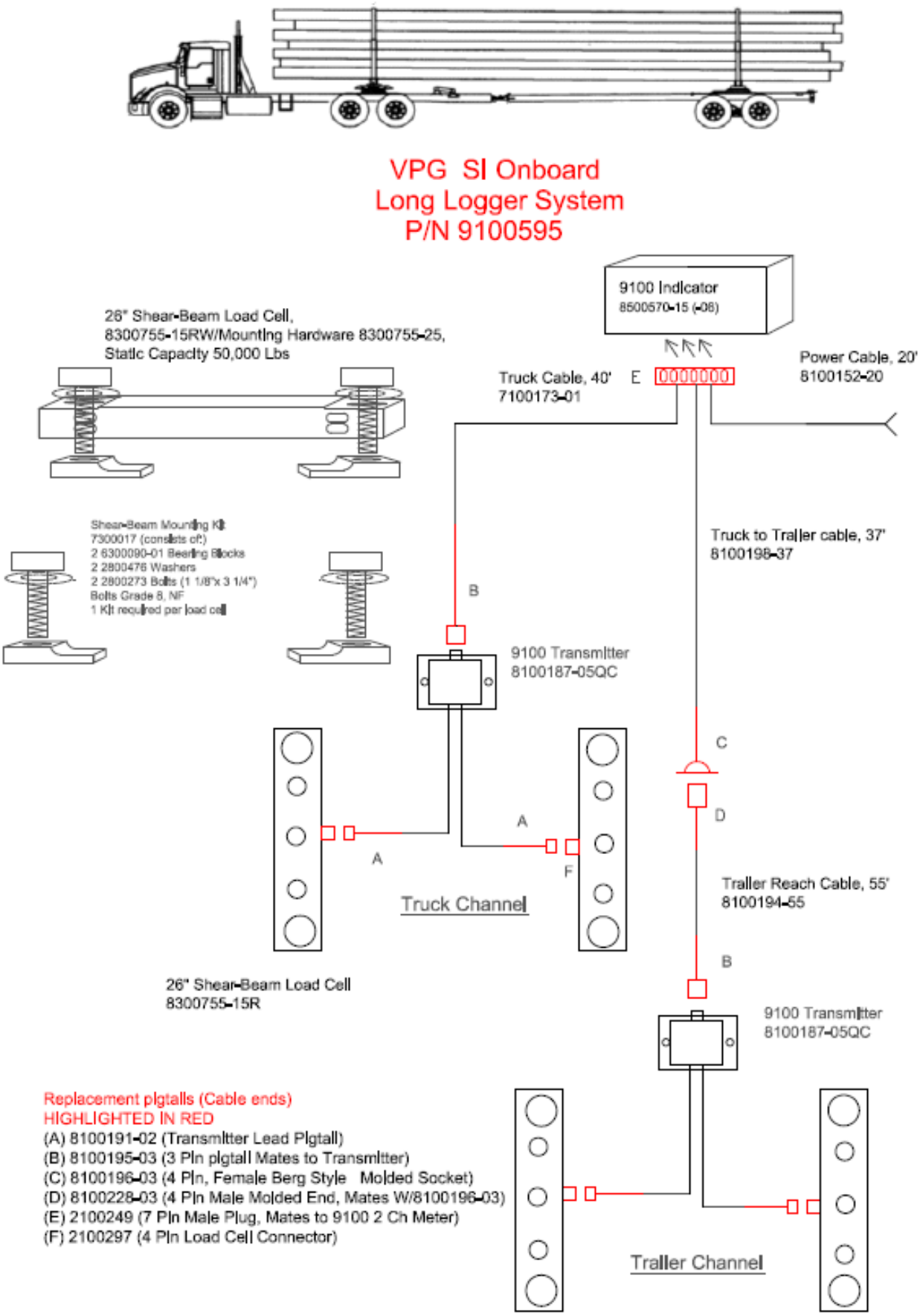
VPG SI Onboard
Long Logger System
P/N 9100595
9100 Indicator
8500570-15 (-06)
26" Shear-Beam Load Cell,
8300755-15RW/Mounting Hardware 8300755-25,
Static Capacity 50,000 Lbs
Truck Cable, 40'
7100173-01
E
Power Cable, 20'
8100152-20
Shear-Beam Mounting Kit
7300017 (consists of:)
2 6300090-01 Bearing Blocks
2 2800476 Washers
2 2800273 Bolts (1 1/8"x 3 1/4")
Bolts Grade 8, NF
1 Kit required per load cell
Truck to Trailer cable, 37'
8100198-37
B
9100 Transmitter
8100187-05QC
C
D
A
A
F
Truck Channel
Trailer Reach Cable, 55'
8100194-55
B
26" Shear-Beam Load Cell
8300755-15R
9100 Transmitter
8100187-05QC
Replacement pigtails (Cable ends)
HIGHLIGHTED IN RED
(A) 8100191-02 (Transmitter Lead Pigtail)
(B) 8100195-03 (3 Pin pigtail Mates to Transmitter)
(C) 8100196-03 (4 Pin, Female Berg Style Molded Socket)
(D) 8100228-03 (4 Pin Male Molded End, Mates W/8100196-03)
(E) 2100249 (7 Pin Male Plug, Mates to 9100 2 Ch Meter)
(F) 2100297 (4 Pin Load Cell Connector)
Trailer Channel

SHORT LOG - TRUCK

VISHAY SI TECHNOLOGIES SHORT LOGGER TRUCK SYSTEM (TRUCK ONLY)

LEVEL	COMPONENT ITEM	DESCRIPTION	QUANTITY
TRK KIT	9100610	SHORT LOGGER 4 KIWI LOAD CELL	1
PART	7100173-01	TRUCK CABLE	2
PART	7300017	KIWI LOAD CELL MOUNTING KIT	4
PART	8100152-20	POWER CABLE, 20’	1
PART	8100187-05QC	9100 TRANSMITTER	2
PART	8300890-13R	14.5” KIWI LOAD CELL	4
PART	8500550-01	9100QC INDICATOR	1

KIWI LOAD CELL MOUNTING KIT 7300017

LEVEL	COMPONENT ITEM	DESCRIPTION	QUANTITY
KIT	7300017	KIWI LOAD CELL MOUNTING KIT	1
	6300090-01	BEARING BLOCKS	2
	2800476	WASHERS	2
	2800273	BOLTS (1 1/8” X 3 1/4”) BOLTS GRADE 8, NF	2

** 1 KIT REQUIRED PER LOAD CELL

REPLACEMENT PIGTAILS (CABLE ENDS)

	COMPONENT ITEM	DESCRIPTION
A	8100191-02	TRANSMITTER LEAD PIGTAIL
B	8100195-03	3 PIN PIGTAIL, MATES TO TRANSMITTER
C	2100349	10 PIN MALE PLUG, MATES TO 9100 4CH METER
D	7100157-01	4 PIN LOAD CELL CONNECTOR, FEMALE

SEE PAGE 88 FOR OPTIONAL KIWI LOAD CELL TRUCK MOUNT.

SHORT LOG - TRUCK

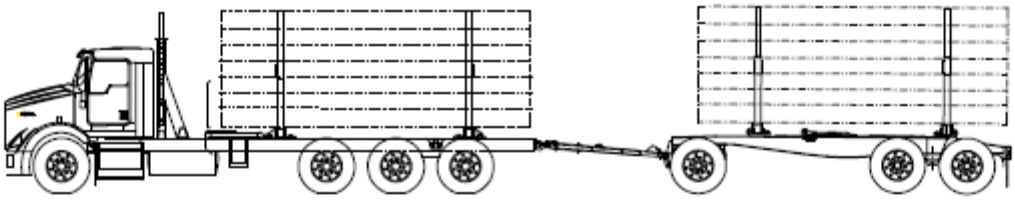

Vishay SI Technologies
Short Logger Truck System
P/N 9100610

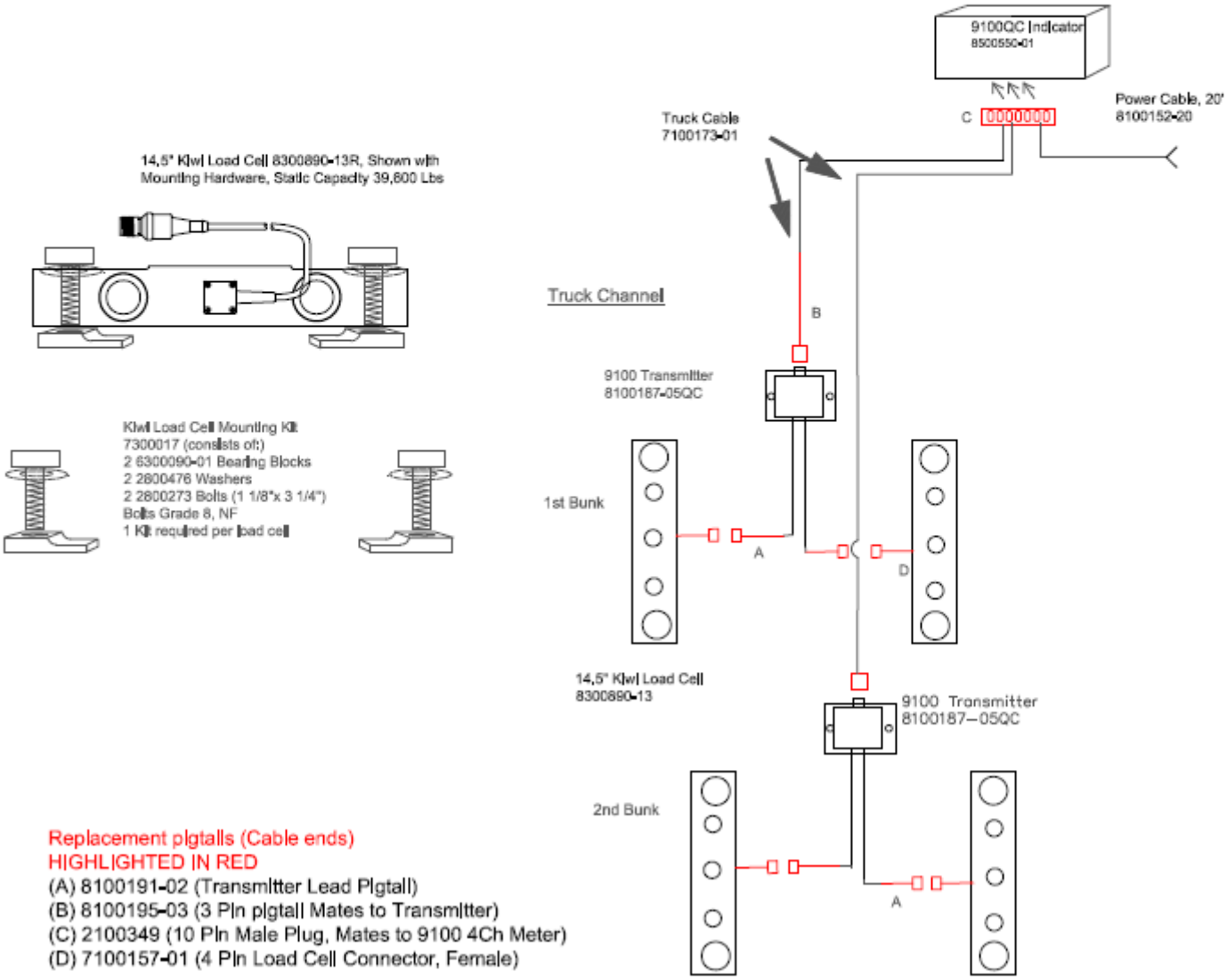

Replacement pigtails (Cable ends)
HIGHLIGHTED IN RED
(A) 8100191-02 (Transmitter Lead Pigtail)
(B) 8100195-03 (3 Pin pigtail Mates to Transmitter)
(C) 2100349 (10 Pin Male Plug, Mates to 9100 4Ch Meter)
(D) 7100157-01 (4 Pin Load Cell Connector, Female)

SHORT LOG - TRAILER

VISHAY SI TECHNOLOGIES TRAILER SHORT LOGGER SYSTEM (TRAILER ONLY)

LEVEL	COMPONENT ITEM	DESCRIPTION	QUANTITY
TRL KIT	9100615	TRAILER KIWI SYSTEM SHORT TRAILER KIT	1
PART	7300017	KIWI LOAD CELL MOUNTING KIT	4
PART	8100187-05QC	9100 TRANSMITTER	2
1	8100194-25Y	TRAILER 'Y' CABLE (4/2 WIRE)	1
1	8100481-45	TRUCK TO TRAILER CABLE (4 WIRE, 45')	1
1	8300890-24	14.5" KIWI LOAD CELL W/MOUNTING HARDWARE 8300890-24	4

KIWI LOAD CELL MOUNTING KIT 7300017

LEVEL	COMPONENT ITEM	DESCRIPTION	QUANTITY
KIT	7300017	KIWI LOAD CELL MOUNTING KIT	1
	6300090-01	BEARING BLOCKS	2
	2800476	WASHERS	2
	2800273	BOLTS (1 1/8" X 3 1/4") BOLTS GRADE 8, NF	2

** 1 KIT REQUIRED PER LOAD CELL

REPLACEMENT PIGTAILS (CABLE ENDS)

	COMPONENT ITEM	DESCRIPTION
A	8100191-02	TRANSMITTER LEAD PIGTAIL
B	8100195-03	3 PIN PIGTAIL, MATES TO TRANSMITTER
C	7100157-01	4 PIN LOAD CELL CONNECTOR, FEMALE

SHORT LOG - TRAILER

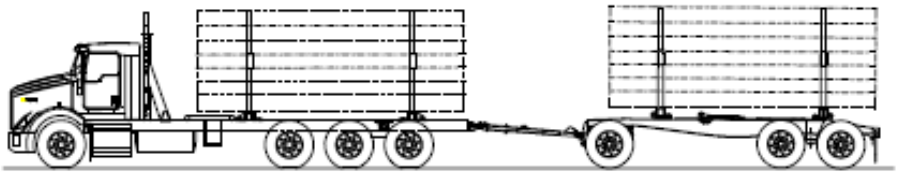

Vishay SI Technologies
Trailer Short Logger System
P/N 91-00615

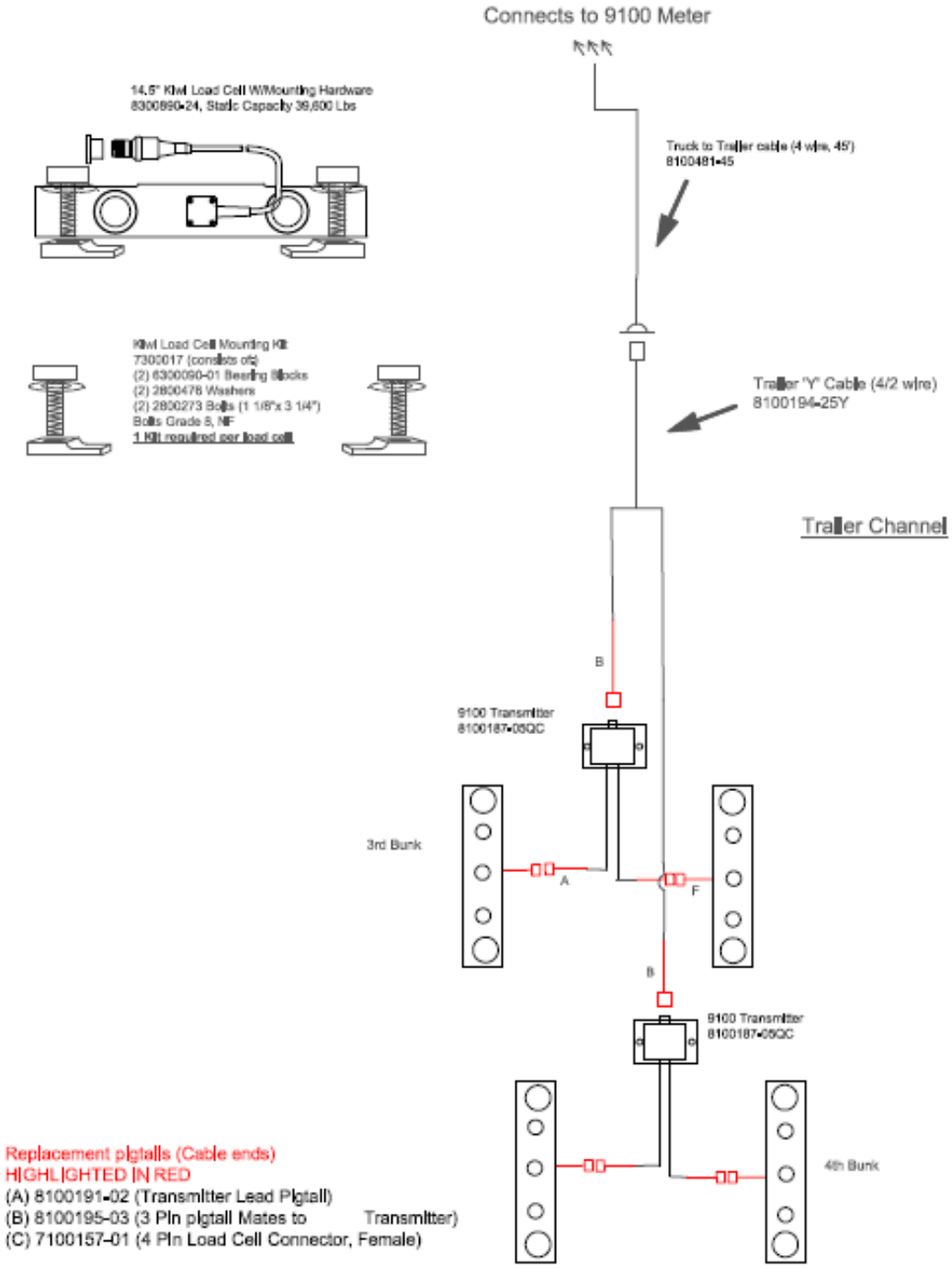

AIR SCALE - TRAILER

VISHAY SI TECHNOLOGIES AIRSCALE TRAILER SYSTEM (TRAILER ONLY)

LEVEL	COMPONENT ITEM	DESCRIPTION	QUANTITY
TRL KIT	9100620	AIRSCALE TRAILER NO METER	1
PART	7100173-15	SIGNAL CABLE	2
1	7100179-02	MOUNTING KIT TRAILER AIR	2
1	8100812-01QC	9100 TRANSMITTER	2
1	8300960-10	AIR SENSOR	2

REPLACEMENT PIGTAILS (CABLE ENDS)

	COMPONENT ITEM	DESCRIPTION
A	8100195-03	3 PIN PIGTAIL, MATES TO TRANSMITTER
B	7100161-01	4 PIN MALE PIGTAIL

***9300870-15 KIT SHOULD BE MOUNTED IN CAB OF VEHICLE.**

AIR SCALE - TRAILER

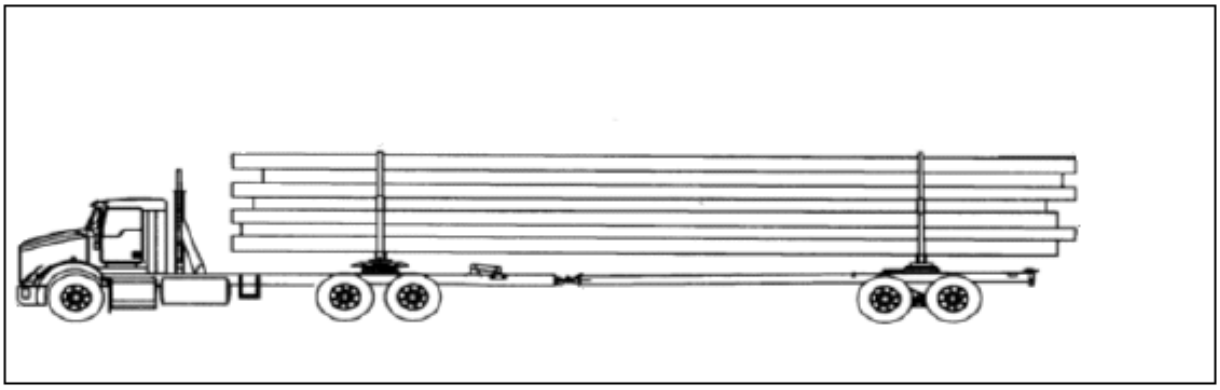

Vishay SI Technologies
AirScale Trailer System
P/N 9100620

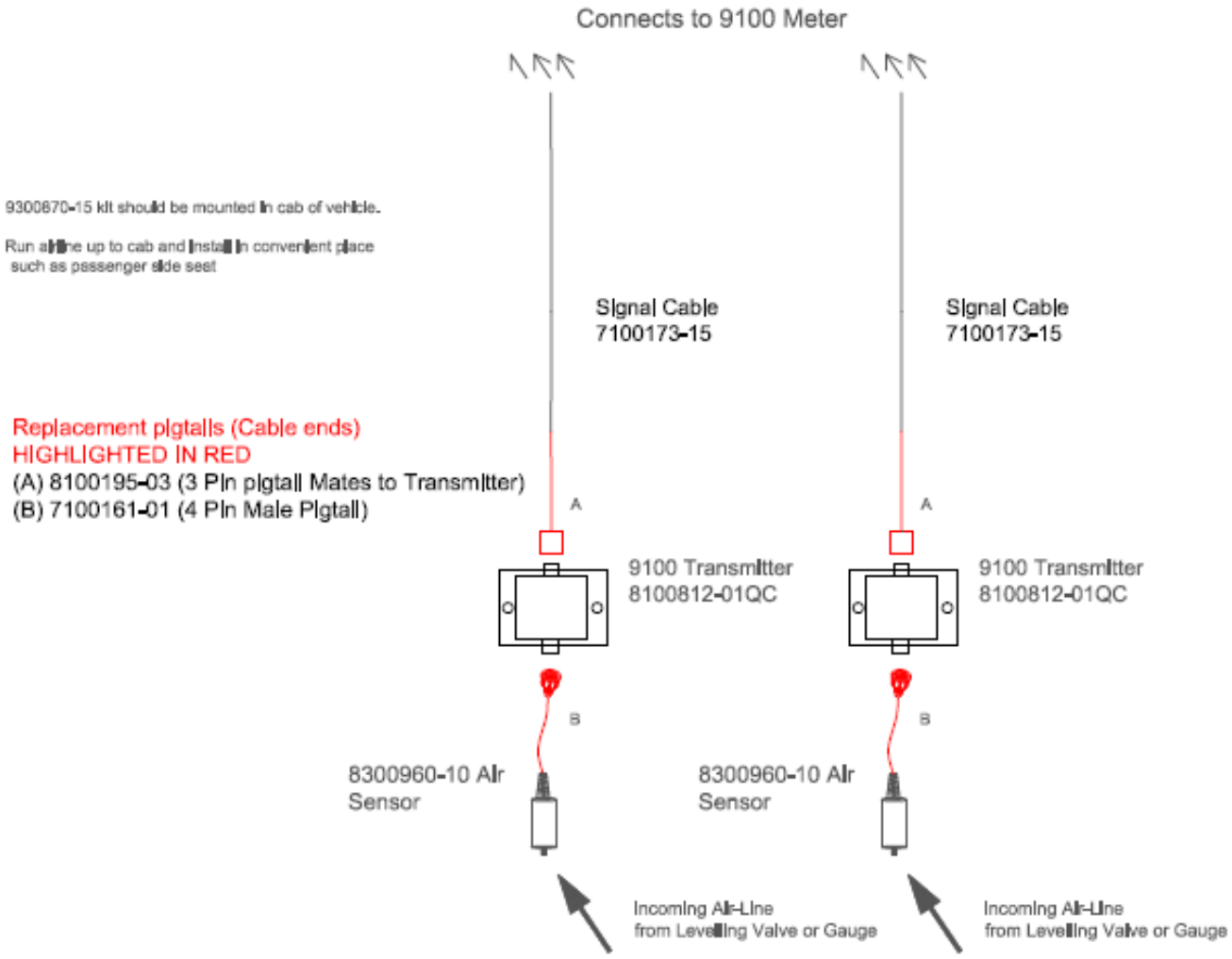

AIR SCALE - TRUCK

VPG SI ONBOARD AIRSCALE SYSTEM (TRUCK ONLY)

	COMPONENT ITEM	DESCRIPTION	QUANTITY
TRK KIT	9101310-40P	SYS AIRSCALE TRUCK ONLY SYS D9098-0016	1
PART	7100173-15	SIGNAL CABLE	1
1	7100179-01	MOUNTING KIT TRUCK AIR	2
1	8100152-20	POWER CABLE	1
1	8100536-01	Y-CABLE MOLDED, AIRSCALE	1
1	8100812-01QC	9100 TRANSMITTER	1
1	8300960-10R	AIR SENSOR	2
1	8500570-15	9100 INDICATOR	1

REPLACEMENT PIGTAILS (CABLE ENDS)

	COMPONENT ITEM	DESCRIPTION
A	8100195-03	3 PIN PIGTAIL, MATES TO TRANSMITTER
B	7100161-01	4 PIN MALE PIGTAIL
C	2100249	7 PIN MALE PLUG, MATES TO 9100 2 CH METER

AIR SCALE - TRUCK

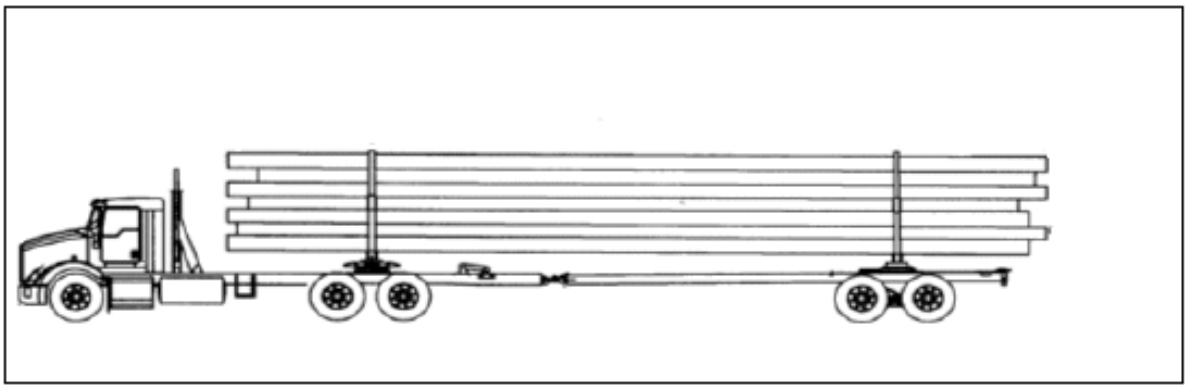

Vishay SI Technologies
AirScale Truck System
P/N 9101310-40

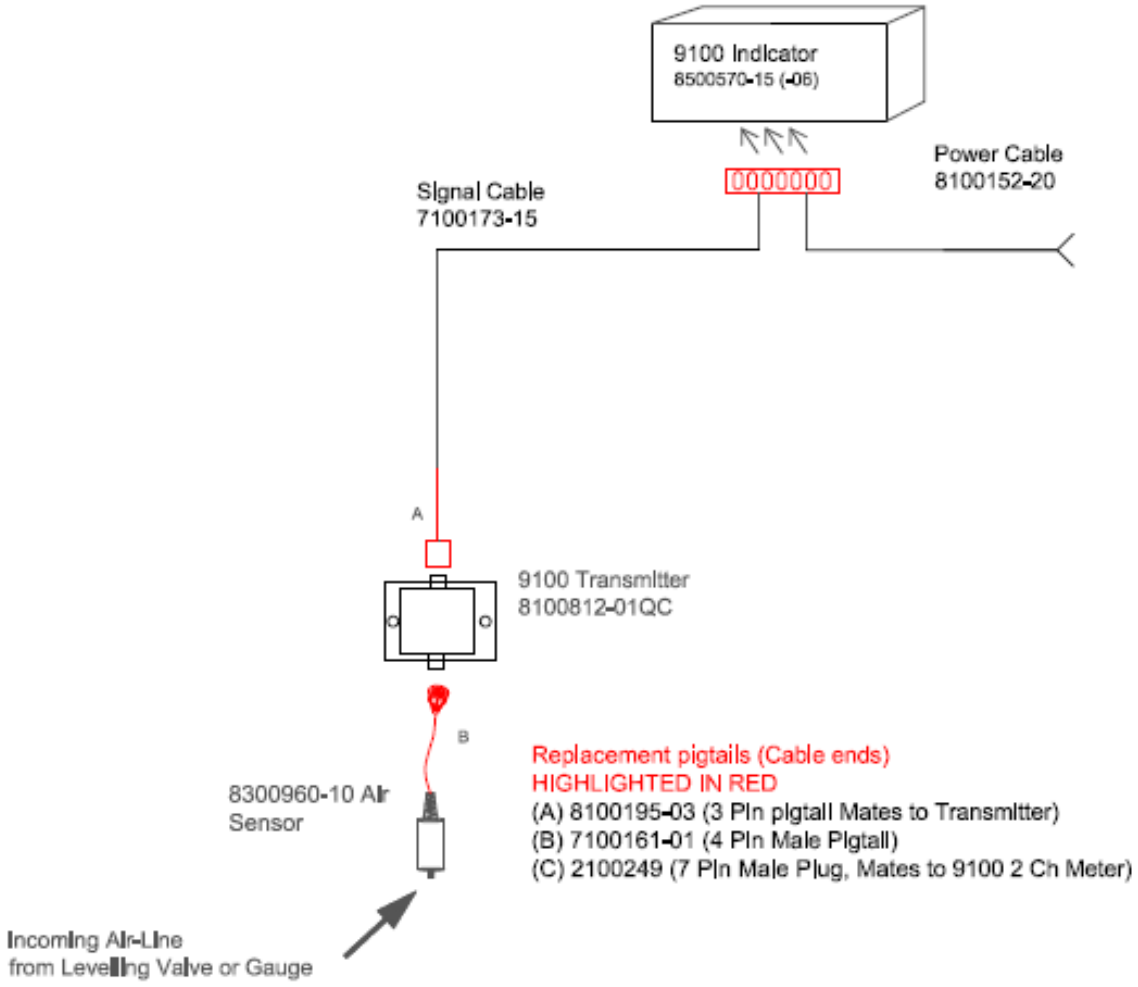

AIR SCALE – TRUCK & TRAILER

VPG SI ONBOARD AIRSCALE SYSTEM (TRUCK & TRAILER)

LEVEL	COMPONENT ITEM	DESCRIPTION	QUANTITY
FULL KIT	9101310-40	SYS D9098-0016 DY1330 DY	1
1	7100173-15	SIGNAL CABLE	1
1	8100152-20	POWER CABLE	1
1	8100812-01QC	9100 TRANSMITTER AMP	2
1	8300960-10	AIR SENSOR	2
1	8500570-15	9100 INDICATOR METER	1

REPLACEMENT PIGTAILS (CABLE ENDS)

	COMPONENT ITEM	DESCRIPTION
A	8100195-03	3 PIN PIGTAIL, MATES TO TRANSMITTER
B	7100161-01	4 PIN MALE PIGTAIL
C	2100249	7 PIN MALE PLUG, MATES TO 9100 2 CH METER

AIR SCALE – TRUCK & TRAILER

VPG SI Onboard
AirScale System (Truck&Trailer)
P/N 9101330-40

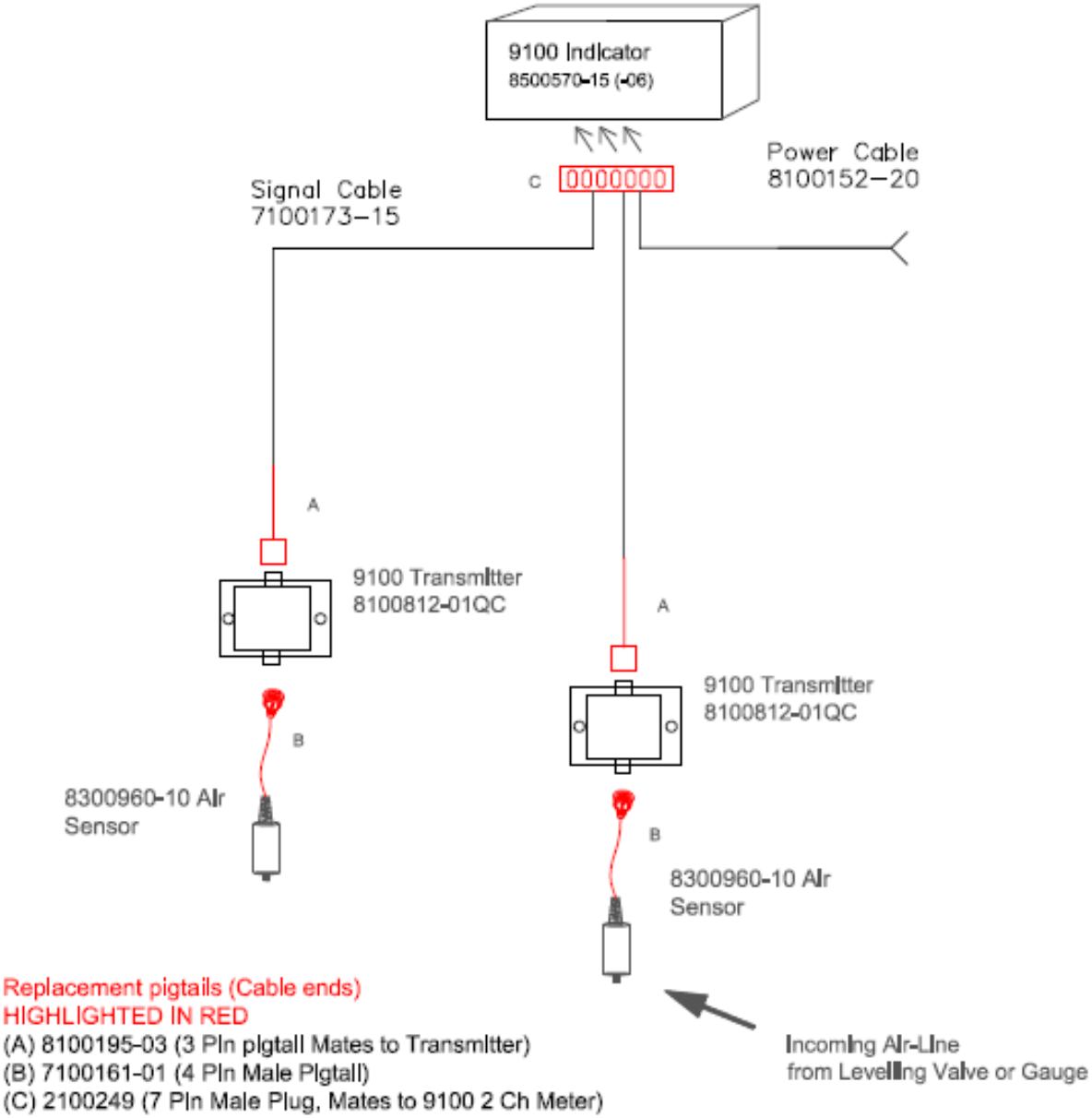

Replacement pigtails (Cable ends)
HIGHLIGHTED IN RED
(A) 8100195-03 (3 Pin pigtail Mates to Transmitter)
(B) 7100161-01 (4 Pin Male Pigtail)
(C) 2100249 (7 Pin Male Plug, Mates to 9100 2 Ch Meter)

5TH WHEEL SCALE

VPG SI TECHNOLOGIES FIXED HOLLAND 5TH WHEEL TRUCK SYSTEM

LEVEL	COMPONENT ITEM	DESCRIPTION	QUANTITY
FULL KIT	9101485-01	FIXED HOLLAND 5TH WHEEL SYSTEM TRUCK SYSTEM	1
PART	2800148	WASHERS	4
1	2800186-01	BOLTS (1 1/4" X 2 11/16") BOLTS GRADE 8, NF	4
1	6300040	BEARING BLOCKS	4
1	7100173-01	TRUCK CABLE	1
1	8100152-20	POWER CABLE	1
1	8100187-05QC	9100 TRANSMITTER AMP	1
1	8301970-10	5TH WHEEL LOAD CELLS	1
1	8500570-15	9100 INDICATOR METER	1

HEAVY DUTY 5TH WHEEL MOUNTING KIT 73-00019

LEVEL	COMPONENT ITEM	DESCRIPTION	QUANTITY
KIT	73-00019	HEAVY DUTY 5TH WHEEL MOUNTING KIT	1
	6300040	BEARING BLOCKS	2
	2800148	WASHERS	2
	2800186-01	BOLTS (1 1/4" X 2 11/16") BOLTS GRADE 8, NF	2

** 1 KIT REQUIRED PER LOAD CELL

REPLACEMENT PIGTAILS (CABLE ENDS)

	COMPONENT ITEM	DESCRIPTION
A	8100191-02	TRANSMITTER LEAD PIGTAIL
B	8100195-03	3 PIN PIGTAIL, MATES TO TRANSMITTER
C	2100249	7 PIN MALE PLUG, MATES TO 9100 2 CH BETTER
D	2500132-02	BUSHING, 35 TONNE
E	2100700	4 PIN LOAD CELL CONNECTOR

5TH WHEEL SCALE

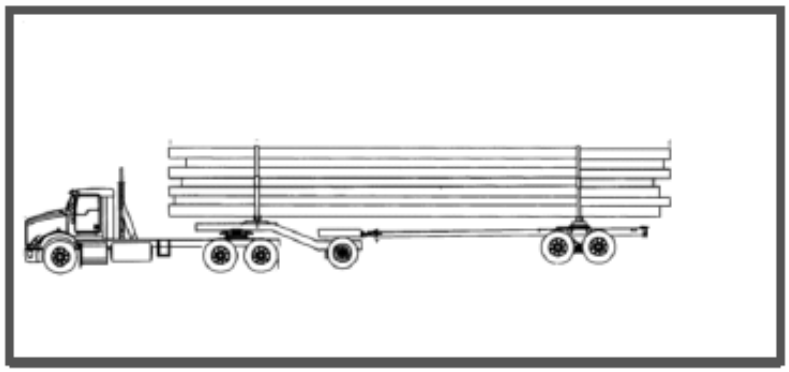

Vishay SI Technologies
Fixed Holland 5th Wheel System Truck System
P/N 9101485-01

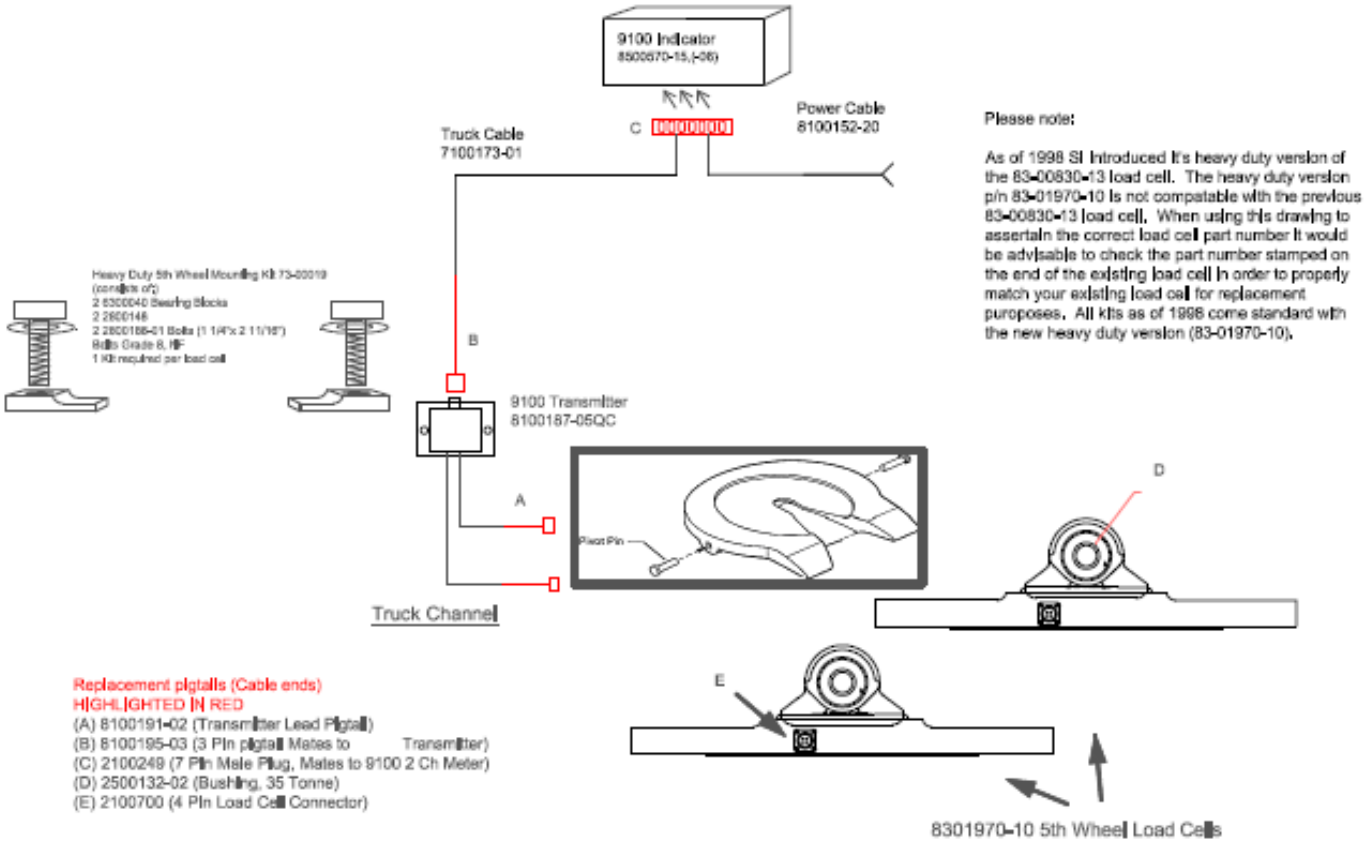

Please note:

As of 1998 SI introduced it's heavy duty version of the 83-00830-13 load cell. The heavy duty version p/n 83-01970-10 is not compatable with the previous 83-00830-13 load cell. When using this drawing to assertain the correct load cell part number it would be advisable to check the part number stamped on the end of the existing load cell in order to properly match your existing load cell for replacement puroposes. All kits as of 1998 come standard with the new heavy duty version (83-01970-10).

HEAVY DUTY (TITAN II) TRUCK & TRAILER

VPG SI ONBOARD HEAVY DUTY LONG LOGGER SYSTEM (TITAN II) TRUCK & TRAILER

LEVEL	COMPONENT ITEM	DESCRIPTION	QUANTITY
TRK&TRL KIT	9102310-01	HEAVY DUTY LONG LOGGER SYSTEM (FULL KIT TRUCK & TRAILER)	1
1	2800148	WASHERS	8
1	2800970	BOLTS (1 1/4” X 3 1/2”) BOLTS GRADE 8, UNF	8
1	6300040	BEARING BLOCKS	8
1	7100173-01	TRUCK CABLE	1
1	8100152-20	POWER CABLE	1
1	8100187-05QC	9100 TRANSMITTER AMP	2
1	8100194-50	TRAILER REACH CABLE	1
1	8100198-37	TRUCK TO TRAILER CABLE	1
1	8301900-10R	28” TITAN II SHEAR-BEAM LOAD CELL	4
1	8500570-15	9100 INDICATOR METER	1

TITAN II MOUNTING KIT 7300018

LEVEL	COMPONENT ITEM	DESCRIPTION	QUANTITY
KIT	7300018	TITAN II MOUNTING KIT	1
	6300040	BEARING BLOCKS	2
	2800148	WASHERS	2
	2800970	BOLTS (1 1/4” X 3 1/2”) BOLTS GRADE 8, UNF	2

** 1 KIT REQUIRED PER LOAD CELL

REPLACEMENT PIGTAILS (CABLE ENDS)

	COMPONENT ITEM	DESCRIPTION
A	8100191-02	TRANSMITTER LEAD PIGTAIL
B	8100195-03	3 PIN PIGTAIL, MATES TO TRANSMITTER
C	8100196-03	4 PIN, FEMALE BERG STYLE MOLDED SOCKET
D	8100228-03	4 PIN, MALE MOLDED END, MATES W/8100196-03
E	2100249	7 PIN MALE PLUG, MATES TO 9100 2 CH METER
F	2100297	4 PIN LOAD CELL CONNECTOR

HEAVY DUTY (TITAN II) TRUCK & TRAILER

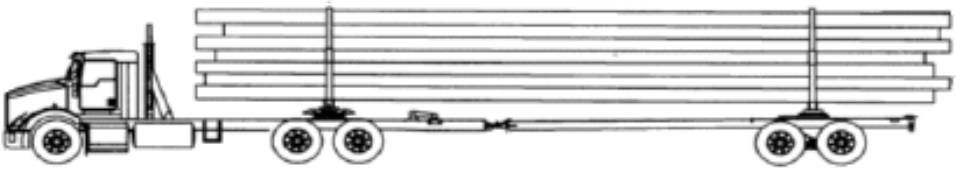

VPG SI Onboard
Heavy Duty Long Logger System
P/N 9102310-01

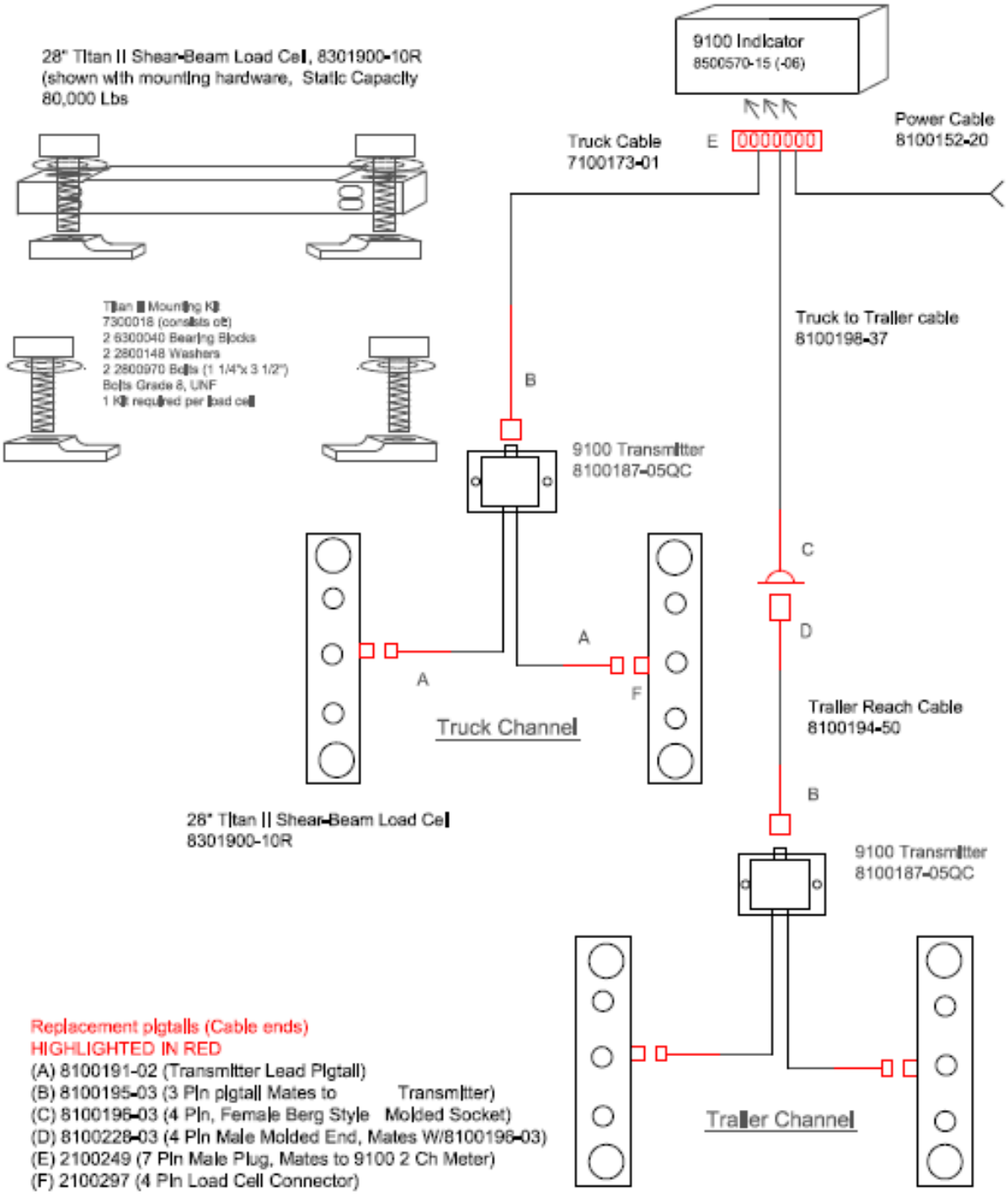

QUAD WALKING BEAM

QUAD AXLE SHORT LOG: WALKING BEAM LOAD CELL (TRUNNION MOUNT)

LEVEL	COMPONENT ITEM	DESCRIPTION	QUANTITY
TRL KIT	9301025Q	TRUNNION SYSTEM QUAD TRAILER (FRONT & REAR WALKING BEAMS)	1
1	2800273	BOLTS (1 1/4” X 3 1/4”) GRADE 8 (NF OR NC???????)	8
1	2800470	NUTS (5/8”)	24
1	2800472	BOLTS (5/8” X 2 1/2”) GRADE 8	24
1	2800476	WASHERS (1 1/8”)	8
1	2800644	WASHERS (5/8”)	48
1	6300321	BEARING BLOCK NEWAY MAGN	8
1	8100187-05QC	9100 TRANSMITTER	2
1	8100194-25Y	TRAILER Y CABLE	1
1	8100481-45	4 WIRE, 45’	1
1	8301615-10R	TRUNNION LOAD CELLS	4
1	8500550-01	9100QC METER	1

TRUNNION LOAD CELL MOUNTING HARDWARE

LEVEL	COMPONENT ITEM	DESCRIPTION	QUANTITY
	6300321	BEARING BLOCKS	2
	2800476	WASHERS (1 1/8”)	2
	2800273	BOLTS (1 1/4” X 3 1/4”) GRADE 8	2
	2800470	NUTS (5/8”)	6
	2800472	BOLTS (5/8” X 2 1/2”) GRADE 8	6
	2800644	WASHERS (5/8”)	12

**** 1 KIT REQUIRED PER LOAD CELL**

QUAD WALKING BEAM

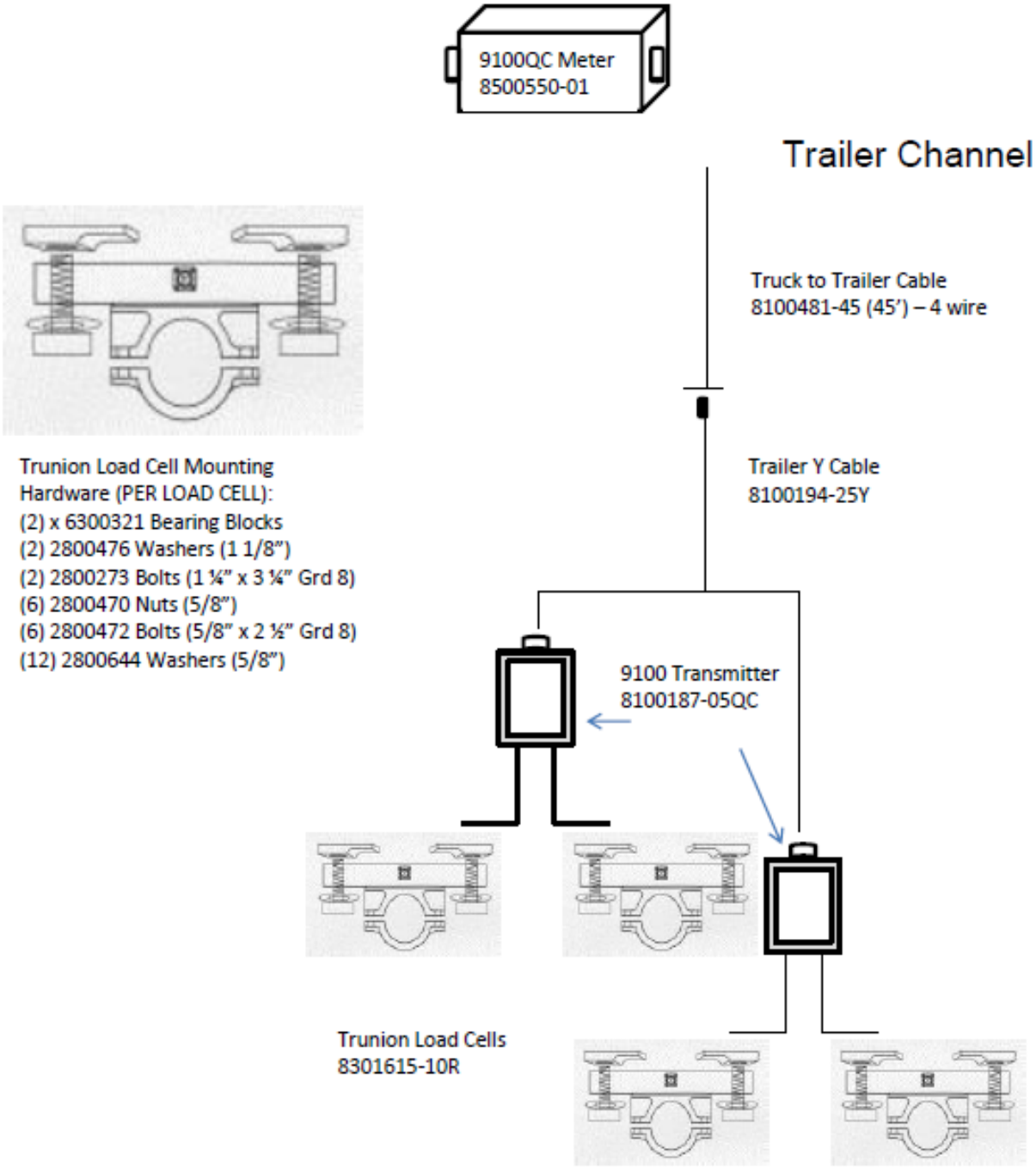

BUNKS

PEERLESS LOGGING BUNKS

LONG LOG BC CONFIGURATIONS

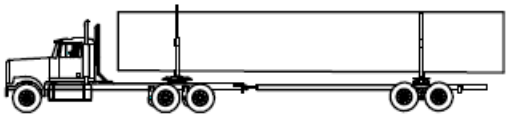

TANDEM TRUCK 'W' TANDEM POLE TRAILER

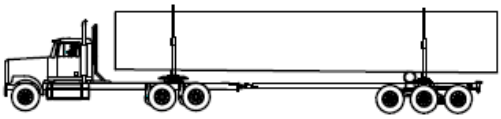

TANDEM TRUCK 'W' TRIDEM POLE TRAILER

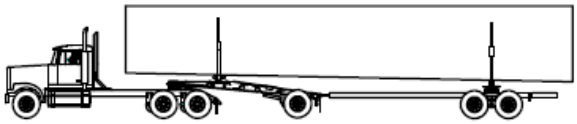

TANDEM TRUCK 'W' S/A JEEP & TANDEM POLE TRAILER

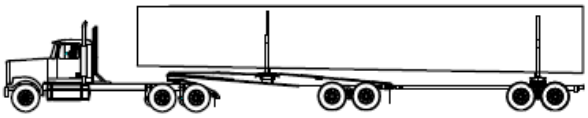

TANDEM TRUCK 'W' TANDEM JEEP & TANDEM POLE TRAILER

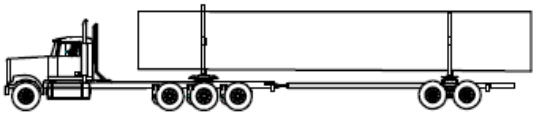

TRIDEM TRUCK 'W' TANDEM POLE TRAILER

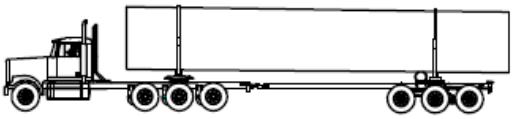

TRIDEM TRUCK 'W' TRIDEM POLE TRAILER

TANDEM TRUCK WITH TRI-AXLE WAGON

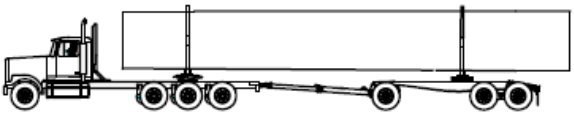

TRIDEM TRUCK 'W' TRI-AXLE WAGON

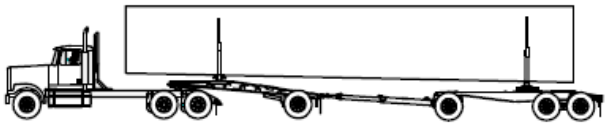

TANDEM TRUCK 'W' S/A JEEP & TRI-AXLE WAGON

SHORT LOG BUNK LAYOUT

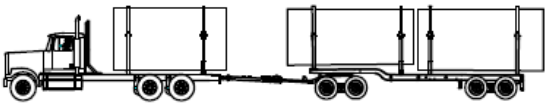

TANDEM TRUCK 'W' QUAD LOGGER

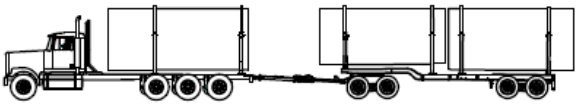

TRIDEM TRUCK 'W' QUAD LOGGER

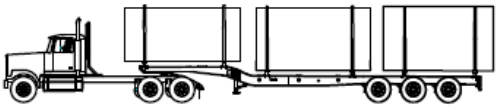

TANDEM TRUCK 'W' 53' SHORTWOOD

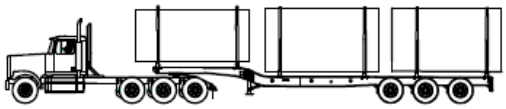

TRIDEM TRUCK 'W' 53' SHORTWOOD

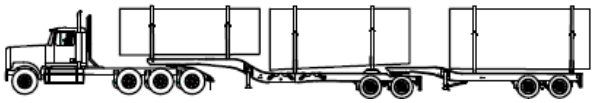

TRIDEM TRUCK 'W' B-TRAIN LOGGER

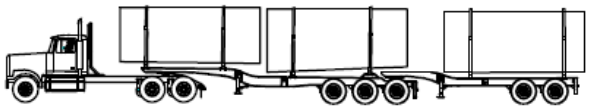

TANDEM TRUCK 'W' SUPER B LOGGER

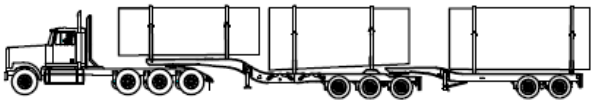

TRIDEM TRUCK 'W' 9 AXLE SUPER B LOGGER

TANDEM TRUCK 'W' KING B LOGGER

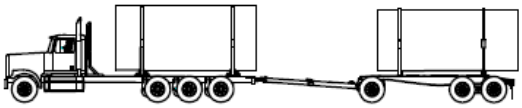

TRIDEM TRUCK 'W' TRI-AXLE LOGGER

LONG WOOD BUNKS & STAKES

BUNK, STAKE, EXTENSION & BOLSTERS

PART NUMBER

BUNK NO.

A B C D

F0S & F1S BUNKS – HARDWARE INCLUDED

EXT – EXTENSION	HD – HEAVY DUTY
F0S – FIXED 0 SIDE	LW – LIGHTWEIGHT
F1S – FIXED 1 SIDE	LP – LOW PROFILE
F2S – FIXED 2 SIDES	STD – STANDARD
HG – HINGED	STK – STAKE

PEERLESS BUNK, STAKE & BOLT COMPONENTS

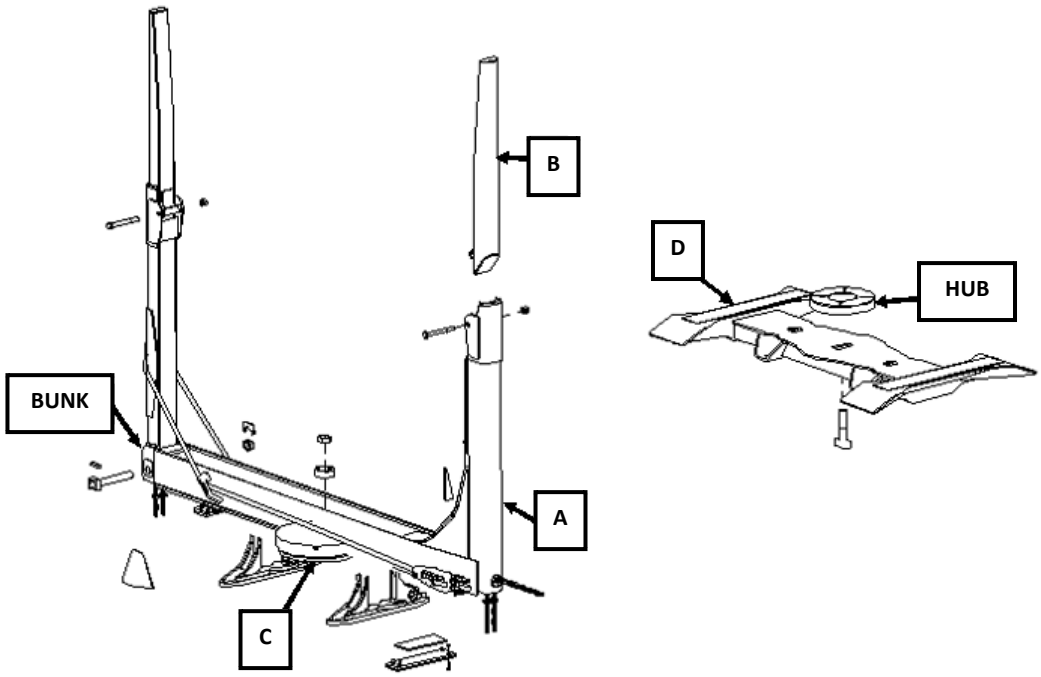

POS	DESCRIPTION
	BUNK
A	STAKE
B	EXTENSION
C	SAUCER
	HUB
D	BOLSTER

PART NUMBER EXAMPLE: BUNK PART # + STAKES + EXTENSION + SAUCER & HUB + BOLSTER

122584 CEGB

8'6" LW BOX F1S, 60" HINGED HEAVY DUTY STAKES, 48" STANDARD TAPERED EXTENTION, 17" STAND SAUCER WITH HUB, TRAILER STANDARD BOLSTER

BOX & CHANNEL

MEASUREMENT GUIDE
(EXAMPLE ONLY)
BUNK

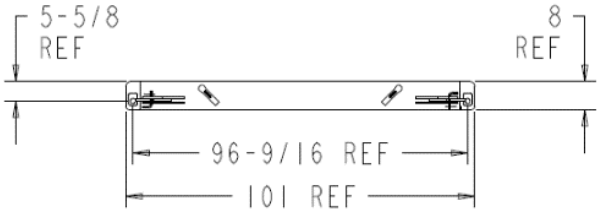

STAKE

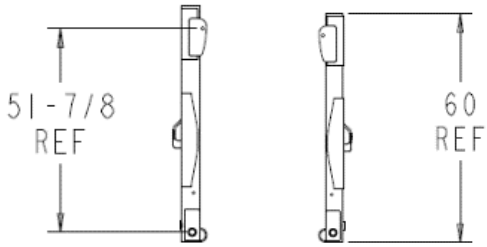

EXTENSION

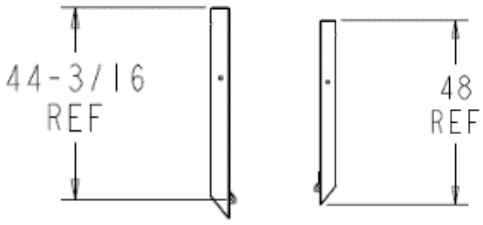

8’6” BUNKS

STANDARD – IN STOCK			
PART #	DESCRIPTION	PART #	DESCRIPTION
85519	8’6” BOX, F0S	103429	8’6” BOX, F1S, 80” HG STK
122584	8’6” BOX F1S	122600	8’6” BOX F2S
98355	8’6” BOX, F1S, 60” HG STK	103431	8’6” BOX, F2S, 84” HG STK
102303	8’6” BOX, F1S, 60” HG STK, HD BUSH	93323	8’6” BOX, F2S, 60” HG STK
103428	8’6” BOX, F1S, 72” HG STK	103430	8’6” BOX, F2S, 72” HG STK
SPECIAL ORDER			
PART #	DESCRIPTION	PART #	DESCRIPTION
84033	8’6” CHL, F0S	91768	8’6” LP, F2S, 60” HG STK
102927	8’6” CHL, F0S, HS BUSHING	104638	8’6” CHL, F1S, 60” HG STK, HD BUSH
93123	8’6” CHL, F1S, 60” HG, LW	112077	8’6” CHL, F1S, 66” HG STK
92507	8’6” CHL, F2S, 60” HG LW	106597	8’6” CHL, F1S, 72” HG STK
93700	8’6” CHL, F2S, 72” HG LW	84850	8’6” CHL, F2S, 60” HG STK
89152	8’6” CHL, F1S, 60” HG STK	112213	8’6” CHL, F2S, 66” HG STK
90156	8’6” LOW PROFILE, F0S	101673	8’6” CHL, F2S, 72” HG STK
91336	8’6” LP, F1S, 60” HG STK		

9’ & 9’6” BUNKS

STANDARD – IN STOCK			
PART #	DESCRIPTION	PART #	DESCRIPTION
55001	9’ BOX, F0S	122606	9’6” BOX, F0S
104615	9’ BOX, F1S, 60” HG STK	108470	9’6” BOX, F2S, 60” HG STK
109919	9’ BOX, F1S, 72” HG STK	114385	9’6” BOX, F2S, 72” HG STK
104611	9’ BOX, F2S, 60” HG STK	108454	9’6” BOX, F2S, 96” HG STK
104594	9’ BOX, F2S, 72” HG STK		
SPECIAL ORDER			
PART #	DESCRIPTION	PART #	DESCRIPTION
94210	9’ CHANNEL, F0S	107471	9’ CHL, F2S, 60” HG STK
94212	9’ CHL, F1S, 60” HG STK		

10’ & 10’6” BUNKS

SPECIAL ORDER			
PART #	DESCRIPTION	PART #	DESCRIPTION
55002	10’ BOX, F0S	103098	10’ BOX, F2S, 60” HG STK
100915	10’ BOX, F0S, HD BUSHING	103422	10’ BOX, F2S, 72” HG STK
113225	10’ BOX, F1S, 60” HG STK	98322	10’ BOX, F2S, 84” HG STK
104575	10’ BOX, F1S, 72” HG STK	104576	10’ BOX, F2S, 96” HG STK
98307	10’ BOX, F1S, 84” HG STK	103351	10’6” BOX, F0S, HD BUSHING
98321	10’ BOX, F1S, 96” HG STK	103684	10’6” BOX, F1S, 60” HG STK, HD BUSHING
102287	10’ BOX, F1S, 96” SLD STK, HD BUSHING	109789	10’6” BOX, F2S, 96” HG STK (FOR WIDE TRACK TRL)
90192	10’ LOW PROFILE, F0S	104580	10’ LP F2S, 84” HG STK
104577	10’ LP F1S, 72” HG STK	101304	10’ LP F2S, 96” HG STK
98514	10’ LP F1S, 84” HG STK	93073	10’6” LOW PROFILE, F0S
104578	10’ LP F1S, 96” HG STK	105996	10’6” LP, F2S, 72” HG STK (FOR WIDE TRACK TRL)
104621	10’ LP F2S, 60” HG STK	111931	10’6” LP, F2S, 96” HG STK (FOR WIDE TRACK TRL)
104579	10’ LP F2S, 72” HG STK		

12’ BUNKS

SPECIAL ORDER			
PART #	DESCRIPTION	PART #	DESCRIPTION
100468	12’ BOX, F0S	104626	12’ BOX, F2S, 96” HG STK
96714	12’ BOX, F2S, 84” HG STK		

A-STAKES

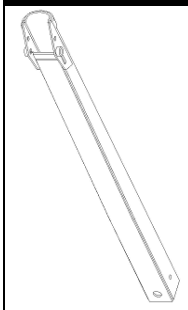

	PART #	DESCRIPTION		PART #	DESCRIPTION
A		NO STAKES	H	55027	72” SOLID HEAVY DUTY
B	81018	60” HINGED STAKES	J	55028	84” SOLID HEAVY DUTY
C	89765	60” HINGED HEAVY DUTY	K	81350	96” SOLID HEAVY DUTY
D	102261	60” HINGED, HD, HO BUSHING	N	102291	96” SOLID W/HO BUSHING
M	93300	66” HINGED STANDARD	L	86422	108” SOLID HEAVY DUTY
S	108359	66” HINGED, HD, HO BUSHING	P	100859	108” SOLID, W/HO BUSHING
E	90584	72” HINGED HEAVY DUTY	Q	101041	120” X 12” HD, DOG LEG
F	90585	84” HINGED HEAVY DUTY	R	92677	72” X 12” HD, DOG LEG
G	90437	96” HINGED HEAVY DUTY			

B-EXTENSIONS

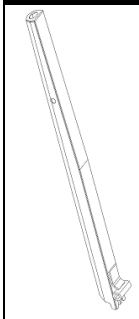

	PART #	DESCRIPTION		PART #	DESCRIPTION
A		NO EXTENSION	H	102194	56” HEAVY DUTY TAPERED
B	81019	48” STANDARD	J	103352	56” HEAVY DUTY
C	89770	48” HEAVY DUTY	K	92508	48” LIGHT WEIGHT (USE WITH 93700 OR 92507 ONLY)
E	90147	48” STANDARD TAPERED	L	98121	54” LIGHT WEIGHT (USE WITH 93700 OR 92507 ONLY)
F	103380	56” STANDARD	M	94881	60” LIGHT WEIGHT (USE WITH 93700 OR 92507 ONLY)
G	90224	56” STANDARD TAPERED		118313	60” EXTENSION

C- SAUCERS

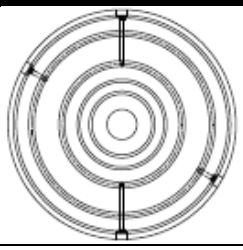

HUBS

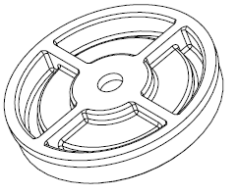

	PART #	DESCRIPTION		PART #	DESCRIPTION
A		NO SAUCER			NO SAUCER
H	94061	14” RECESSED		55055	14” STANDARD
B	55008	14” STANDARD		20-105341	15” T-LOCK
E	20-20647	15” T-LOCK		55056	17” STANDARD
G	55009	17” STANDARD		55057	20” STANDARD
K	104586	17” RECESSED		88246	24” T-LOCK
SPECIAL ORDER	55010	20” STANDARD		20-112	15” LOW PROFILE
	88247	24” T-LOCK		101293	17” T-LOCK
	20-110	15” LOW PROFILE		8574	15” COLUMBIA LOW PRO
	8779A	15” COLUMBIA LOW PRO		L-148	14” COLUMBIA
	L-149	14” COLUMBIA			
	104585	LOCK (S)			
	103031	LOCK (B)			

D-BOLSTERS

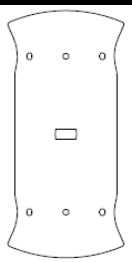

	PART #	DESCRIPTION		PART #	DESCRIPTION
A		NO BOLSTER	R	92204	TRAILER OFF HWY, NO SCALES
B	82965	TRAILER, STANDARD	K	84432	TRUCK, STANDARD
C	87812	TRAILER, HD	L	93566	TRUCK, LIGHT WEIGHT
D	81213	TRAILER, OFF HIGHWAY	S	104599	TRUCK, HD EXTENDED WING
E	93568	TRAILER, LIGHT WEIGHT	M	103687	TURCK, HD T-LOCK EXTENDED WING
F	93792	TRAILER, HD, LP, WIDE	N	87813	TRUCK, HD
Q	94432	TRAILER, LP STANDARD	P	84655	TRUCK, OFF HWY NO SCALES
G	101292	TRAILER HD, LP, T-LOCK		115840	TRAILER LOW PRO

SAUCER HARDWARE

DESCRIPTION	PART #	DESCRIPTION
TEFLON LINER, 14” SAUCER	91614	TEFLON LINER OUTER, 17” SAUCER
TEFLON LINER, 15” T-LOCK SAUCER	91615	TEFLON LINER INNER, 17” SAUCER

BUNK BOLTS

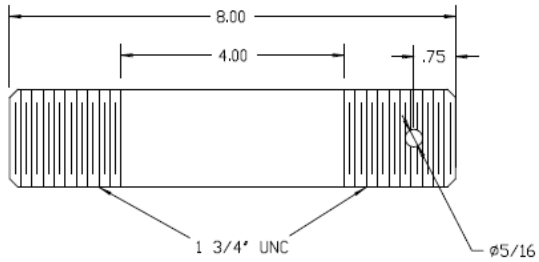

PART #	DESCRIPTION
55042	STD BUNK BOLT 1 3/4 X 6”
55042-32	BUNK BOLT 1 3/4 X 8”
55042-38	BUNK BOLT 1 3/4 X 9 1/2”
55042-40	BUNK BOLT 1 3/4 X 10 1/2”
89676	BUNK BOLT 1 3/4 X 13”

LIVE BUNK BOLT

88258	LIVE BUNK BOLT 13”
88517	LIVE BUNK BOLT 14 3/8”
101294	T-LOCK BOLT 1 3/4”

NUTS – FOR STAKE BOLTS

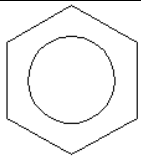

55036	JAM NUT 1 1/2” NC
	JAM NUT 1 3/4” NC

STAKE BOLTS

PART #	DESCRIPTION
89772	STAKE BOLT 8 7/8”
89773	STAKE BOLT 9 1/8”
89774	STAKE BOLT 9 1/2”
89777	STAKE BOLT 10 1/2”
102283	STAKE BOLT 1 3/4 X 10 3/8”
01201	7/8 NYLOCK
01145	7/8 X 7 1/2” HEXBOLT (NF)

BUNK COMPONENTS

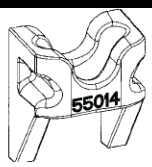

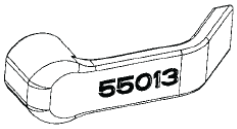

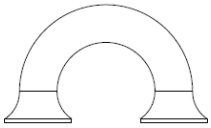

PART #	DESCRIPTION	PART #	DESCRIPTION	PART #	DESCRIPTION
55014	CABLE ANCHOR	55103	CABLE GUIDE	55017	CABLE GUIDE

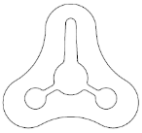

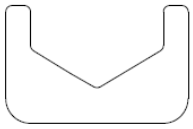

PART #	DESCRIPTION	PART #	DESCRIPTION	PART #	DESCRIPTION
93367	BUNK TEETH 1 1/4” H, ???? 16”	98689	YOKE, BUNK SPRING	103391	LOCK, STAKE BOLT
103082	BUNK TEETH 1 7/8” H, ????				

STAKE & EXTENSION HARDWARE

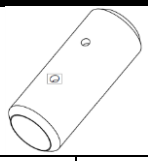

PART #	DESCRIPTION	PART #	DESCRIPTION
55098	STAKE BUSHING 1 1/2”	101296	PACMAN CLIP, SMALL
102189	STAKE BUSHING 1 3/4”	98688	PACMAN CLIP, LARGE

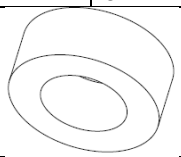

PART #	DESCRIPTION	PART #	DESCRIPTION
81019-08	EXT HINGE BUSHING, LONG	102353	EXT TIEDOWN HOOK & CHAIN
96212	CHEEK PLATE BUSHING - SHORT	102354	TIEDOWN, HOOK ONLY
		83111	HOOK, EXTENSION SPRING

BUNK QUICK CHANGE KIT

90377 QUICK CHANGE BUNK

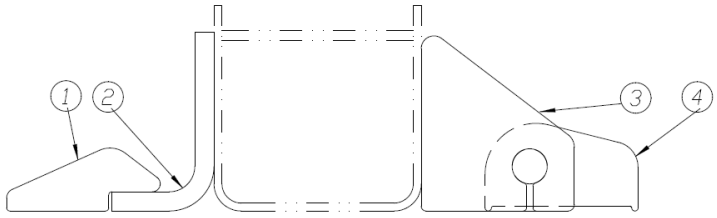

POS.	PART #	DESCRIPTION	POS.	PART #	DESCRIPTION
1	90377-01	PLATE CLIP (2)	4	90732	QUICK CHANGE BUNK 2” RISE
2	90377-04	FRONT CLIP (2)	5	90732-01	SIDE PLATE (2)
3	90377-03	EAR (4)	6	90732-04	PLATE (2)
	115700	S/W (102781 BUNK)	7	01230	BOLT 1 1/4” X 4 1/2”
				01191	NUT

94518 AIR LOCK BUNK

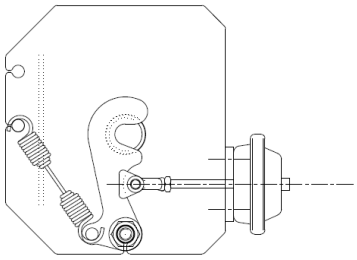

PART #	DESCRIPTION
94518	AIR BUNK LOCK
	CSB12SCC AIR CHAMBER
	1-322 SPRING

88258 LIVE BUNK BOLT 13”
88517 LIVE BUNK BOLT 14 3/8”
55037 JAM NUT 1 3/4” NC

BUNK SPRINGS

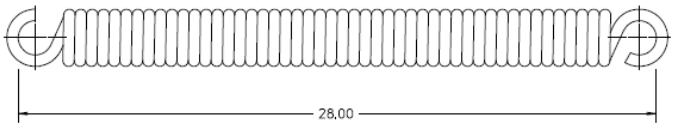

PART #	DESCRIPTION
55123	STANDARD BUNK SPRING 1/2” X 2 1/2” X 29”
55122	BUNK SPRING 1/2” X 2 1/2” X 18”

STAKE EXTENSION SPRINGS

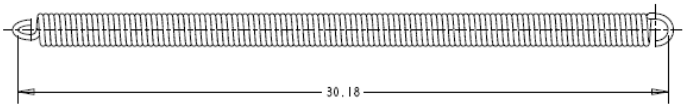

PART #	DESCRIPTION
84236	STANDARD EXTENSION SPRING, 30” LONG
84236-24	SHORT EXTENSION SPRING, 24” LONG

STAKE CABLES AND HARDWARE

PART #	DESCRIPTION
L8	1” QUICK FIX ASSEMBLY
L9	1 1/8” QUICK FIX ASSEMBLY
LW8	1” WEDGE ONLY
LW9	1 1/8” WEDGE ONLY
300-018	1” CABLE FOR 8’6” BUNK 11’6” LONG
	1” CABLE FOR 8’6” BUNK 1FS 12’6” LONG

TRIPS

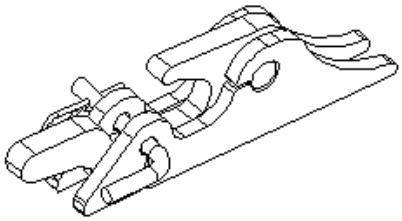

PART #	DESCRIPTION
89820	TRIP ASSEMBLY
94272	TRIP ASSEMBLY 1FS

BELLS

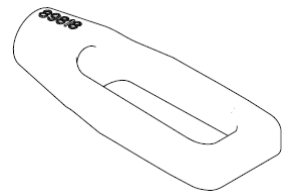

PART #	DESCRIPTION
89818	CABLE BELL 1”
89819	CABLE BELL 1 1/8"

BUNK LOCKS

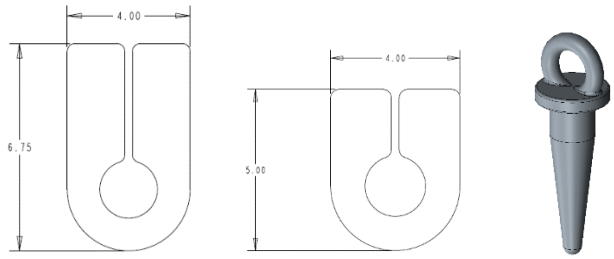

PART #	DESCRIPTION
55180	LONG BUNK LOCK
55181	SHORT BUNK LOCK
55058	CARROT PIN

RUB SHOES

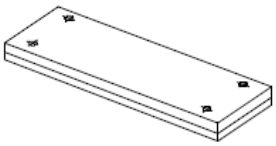

PART #	DESCRIPTION
01284	BRASS BOLT ASSY 3/8’ X 1 1/2” (INCLUDES NUT)
91771	RUB SHOE COMPLETE ASSEMBLY, 16” LONG
91771-01	UHMW PAD ONLY 1/2” THICK
91771-05	UHMW PAD ONLY 3/4” THICK
91771-02	RUB SHOE METAL PAD, 16” LONG
	COMPLETE ASSY = RUB SHOE PAD, UHMW, 4 BOLTS

DEFINITIONS			
ACRONYM	DEFINITION	ACRONYM	DEFINITION
F0S	FIXED NO SIDES (BOTH SIDES ARE TRIPPING STAKES)	LW	LIGHT WEIGHT VERSION
F1S	FIXED ONE SIDE (ONE SIDE HAS TRIPPING STAKES)	LP	LOW PROFILE SECTION
F2S	FIXED TWO SIDED (NOT A TRIPPING BUNK, 2 FIXED STAKES)	HG	HINGED
CHL	CHANNEL BUNK CROSS SECTION	STK	STAKE
BOX	BOX BUNK CROSS SECTION	BUSH	BUSHING

SHORT WOOD BUNKS & STAKES

PEERLESS BUNKS FIXED STAKES

MEASUREMENT GUIDE
(EXAMPLE ONLY)

BUNK & STAKE

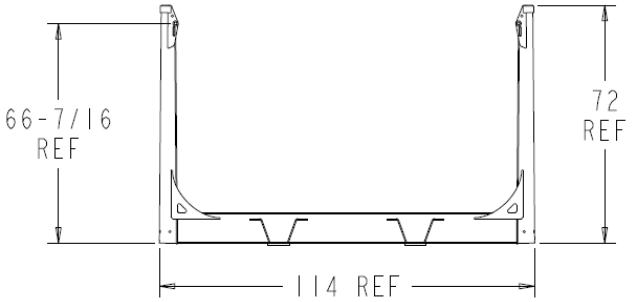

EXTENSION

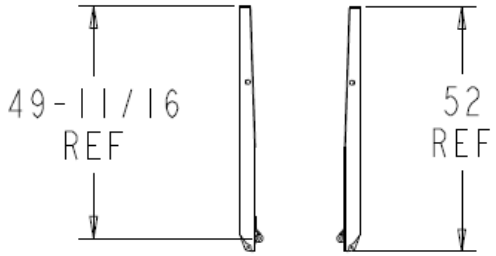

PART #	DESCRIPTION	PART #	DESCRIPTION
102781	8’6” 14 TON, F2S-72” STAKE 57” EXTENSION	164300	ASSY, EXT, STAKE 14T, 57.0
109038	8’6” 14 TON, F2S-72” STAKE 52” EXTENSION	164301	ASSY, EXT, STAKE 14T, 55.0
109032	8’6” 14 TON, F2S-62” STAKE 52” EXTENSION	164302	ASSY, EXT, STAKE 14T, 53.0
112152	8’6” 14 TON, F2S-62” STAKE 57” EXTENSION	164303	ASSY, EXT, STAKE 14T, 51.0
102799	STAKE EXT. 57” Overall	164304	ASSY, EXT, STAKE 14T, 49.0
130102	9’6” 14 TON BUNK	164305	ASSY, PAIR, 14T, 47 EXT, 62 STAKE
128218	8’6” – 9’6” EXPANDO	164306	ASSY, PAIR, 14T, 47 EXT
129900	8’6” – 9’6” – 10’6” EXPANDO	164307	ASSY, EXT, STAKE, 14T, 47.0
109033	STAKE EXTENSION 52” Overall		

DROP-IN-STAKE STYLE BUNK

9T

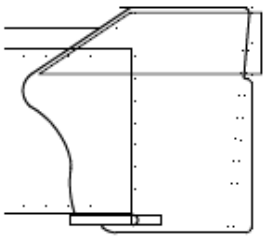

14T

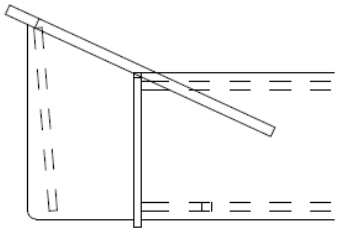

PART #	DESCRIPTION	PART #	DESCRIPTION
96661	8’6”, 6 TON CLAMP ON LW (6” RISE) 41” FRC	104954	16 TON CLAMP ON LW (6” RISE) 41” FRC
101561	8’6”, 6 TON CALMP ON STD (9 518” RISE) 41” FRC	110413	16 TON CLAMP ON LW (6” RISE) 41” FRC
110584	10’, 6 TON CLAMP ON (8” RISE) 41” FRC	110412	16 TON CLAMP ON LW (6” RISE) 41” FRC
110408	10’, 9 TON CALMP ON (8” RISE) 53” FRC	105870	16 TON CLAMP ON LW (6” RISE) 41” FRC
105991	8’6”, 16 TON CLAMP ON (9” RISE) 41” FRC	110411	16 TON CLAMP ON LW (6” RISE) 41” FRC
110414	6 TON CLAMP ON LW (6” RISE) 41” FRC	110409	16 TON CLAMP ON LW (6” RISE) 41” FRC

BUNK COMPONENTS

PART #	DESCRIPTION
94131	BUNK CLAMP
	3/4” X 3” CLIP BOLT

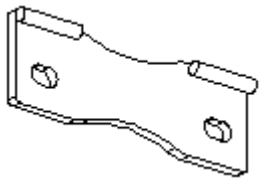

DROP IN STAKES

PART #	DESCRIPTION	PART #	DESCRIPTION
94100	4” x 72” STAKE & 57” EXTENSION	109489	HD 4” X 84” STAKE & 57” EXTENSION
97996	4” X 84” STAKE & 57” EXTENSION	105864	HD 4” X 120” STAKE BOX SECTION
94099	4” X 120” STAKE BOX SECTION	102220	3” X 85 3/4” STAKE (6 TON)
109496	HD 4” X 72” STAKE & 57” EXTENSION	91299	3” X 120” STAKE (6 TON)
94133	72” STAKE	94134	57” EXTENSION
01405	HINGE STAKE BOLT – 8”		

EXTE BUNKS & STAKES

PART	DESCRIPTION
E811671F108.5	8’6” – 10’6’ XTENDO BUNK, FOLDING STAKE W/ CLAMPS
E811671F117.5	8’6” – 10’6” XTENDO BUNK, 117.5” FOLDING STAKE W/ CLAMPS
E811671FNC117.5	8’6” – 10’6” XTENDO BUNK, 117.5” FOLDING STAKE, NO CLAMPS
E811515F108.5	9’6” BUNK, 108.5” FOLDING STAKE W/ CLAMPS
E811515F117.5	9’6” BUNK, 117.5” FOLDING STAKE W/ CLAMPS
E811515FNC117.5	9’6” BUNK, 117.5” FOLDING STAKE, NO CLAMPS
ELIGHTKITR	EXTE BUNK LIGHT KIT, RED
ELIGHTKITY	EXTE BUNK LIGHT KIT, YELLOW

EXTE: ES – SERIES ES12

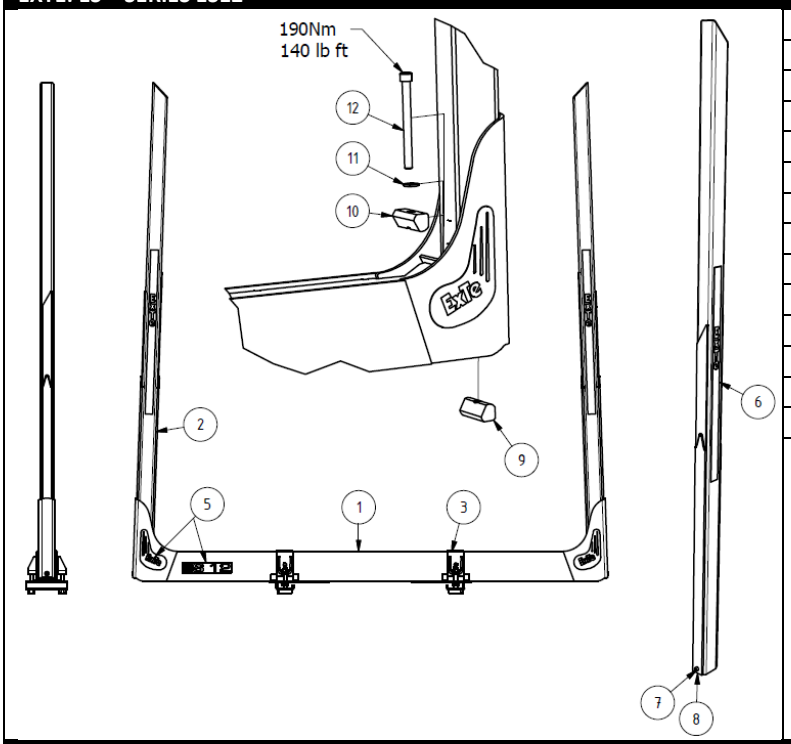

POS	PART #	DESCRIPTION
1	811514	BOLSTER ES12 8.6 / 2600MM
1	811515	BOLSTER ES12 9.6 / 2900MM
2	811650	STAKE ES12 EURO 120”
		OTHER LOADING HEIGHTS ON REQUEST
3	810850	MOUNTING ATTACHMENT
4	811206	BOLSTER RUBBER
5	811232	DECAL KIT BOLSTER
6	811212	DECAL KIT STAKE
7	211673	M12 X 30 MC6S
8	211857	LOCKING NUT M12
9	811531	LOWER WEDGE
10	811532	UPPER WEDGE
11	211910	WASHER 17 X 30 X 3 FZB
12	211627	SCREW MC6S M16 X 180 FZB

EXTE: ES – SERIES CLAMPING ATTACHMENT

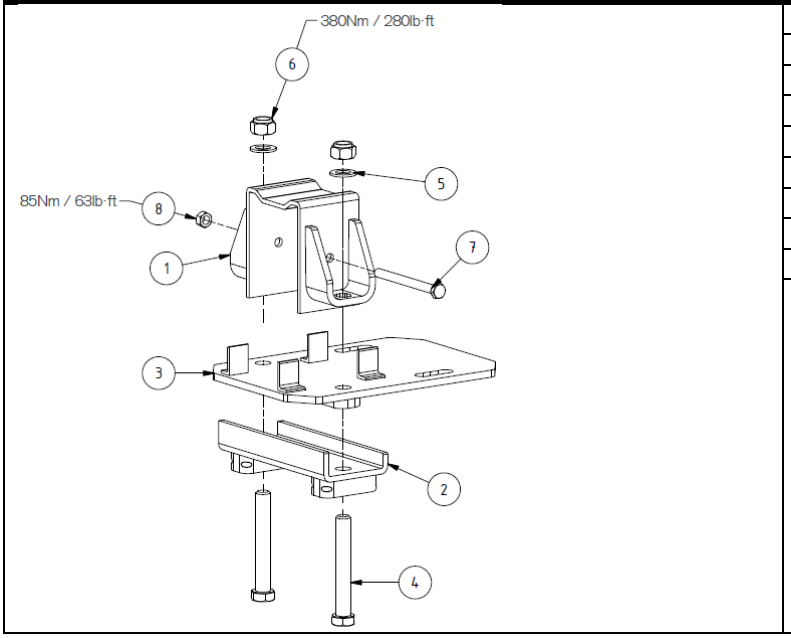

POS	PART #	DESCRIPTION
1	800765	UPPER CLAMP
2	800672	LOWER CLAMP
3	810851	MOUNTING PLATE
4	211171	SCREW M20 X 140
5	211902	WASHER 36 X 21 X 3 FZB
6	211861	LOCKING NUT 20
7	211098	SCREW M12 X 140
8	211857	LOCKING NUT M12
9	810911	EXTRA CLAMP ES

CALL FOR PRICING

EXTE: ES – SERIES ES12F

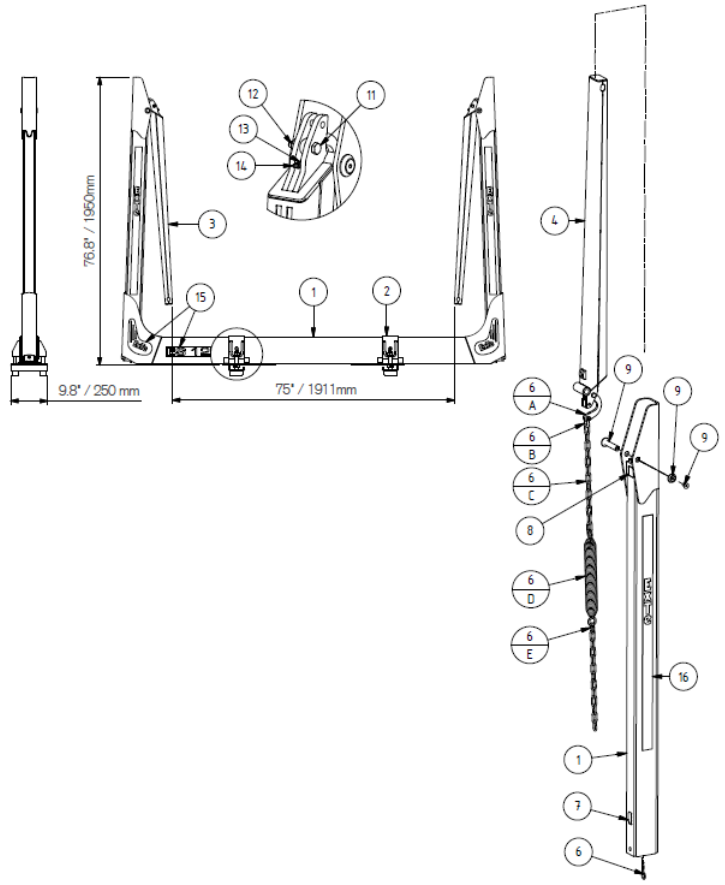

POS	PART #	DESCRIPTION
1	811500	BOLSTER ES12 8'6" / 2600 MM
1	811510	BOLSTER ES12 9'6" / 2900 MM
2	810850	CLAMPING ATTACHMENT
3	811600	FOLDABLE STAKE ES12 122.5"
3	811601	FOLDABLE STAKE ES12 120"
3	811602	FOLDABLE STAKE ES12 117.5"
3	811603	FOLDABLE STAKE ES12 115"
3	811604	FOLDABLE STAKE ES12 112.5"
4	811228	TOP STAKE 122.5"
4	811202	TOP STAKE 120"
4	811216	TOP STAKE 117.5"
4	811217	TOP STAKE 115"
4	811218	TOP STAKE 112.5"
5	811610	LOWER STAKE ES 12
6	811620	SPRING KIT
6A	811209	*CAM
6B	171010	*SHACKLE 10MM
6C	171011	*CHAIN
6D	811208	*SPRING
6E	171009	*QUICK LINK
7	811206	BOLSTER RUBBER
8	811205	HINGE RUBBER
9	811210	PIN KIT
10	811204	LOCKING PIN
11	211014	M10 X 50 8.8
12	800165	M10 LOC-K
13	811207	EXTENSION FOR GREASE NIPPLE
14	800166	GREASE NIPPLE M6 X 1
15	811232	DECAL KIT BOLSTER
16	811212	DECAL KIT STAKE

EXTE: ES – SERIES ESX12 SPARE PARTS

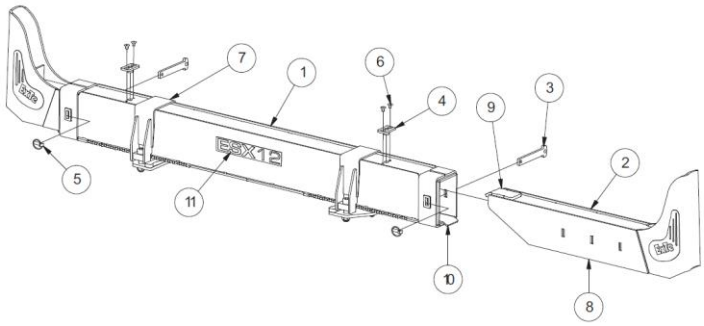

POS	PART #	DESCRIPTION
1	811245	BOLSTER
2	811240	EXPANDABLE BOLSTER
3	811244	PIN
4	400882	LOCKING PLATE
5	801322	LYNCH PIN
6	211191	SCREW MF6S M10 X 16
7	811246	CLAMPING ATTACHMENT
8	811241	OUTER WEAR PLATE
9	811242	TOP WEAR PLATE
10	811243	INNER WEAR PLATE
11	811248	DECAL KIT

EXTE: CLAMP

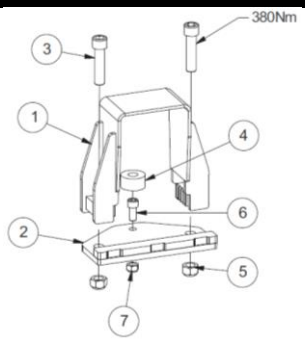

POS	PART #	DESCRIPTION
1	811246	UPPER CLAMP
2	811247	LOWER CLAMP
3	211646	SCREW M20 X 100
4	800656	RUBBER DAMPER
5	211861	LOCKING NUT M20
6	211641	SCREW M06S M14 X 30
7	211867	LOCKING NUT M14

CALL FOR PRICING

AXLES

AXLES

COMMON AXLE PART NUMBERS

PART #	DESCRIPTION	ADDITIONAL INFORMATION
62003	STR AXLE, 35” TRACK,5/8”WALL	7.63” CAM, ALI, 10SPL, 12.25 X 7.5BR
62004	STR AXLE, 35” TRACK,5’8” WALL	7.63” CAM, ALI, 10SPL, 16.5 X 7 BRK
62005	STR AXLE, 83” TRACK, 3/4" WALL	26.5” CAM, ALI, 10SPL, 16.5 X 7 BRK
62006	STR AXLE, 89” TRACK, 5/8” WALL	26.5” CAM, ALI, 10SPL, 16.5 X 7 BRK
62008	STR AXLE, 77.5” TRACK, 5/8” WALL	23.625 CAM, ALI, 10 SPL, 16.5 X 7 BRK
62012	STR AXLE, 35” TRACK, 5/8” WALL	7.63 CAM, OPP 180 DEG, L/L, 16.5 X 7
62013	STR AXLE, 38” TRACK, 5/8” WALL	7.63 CAM, ALI, R/L, 10 SPL, 16.5 X 7 BR
62014	STR AXLE, 77.5” TRACK, 5/8” WALL	26.5 CAM, ALI, 10 SPL, 16.5 X 7 BRK
62015	STR AXLE, 89” TRACK, 5/8” WALL, TIRE INFLATION	26.5 CAM, ALI, 10 SPL, 16.5 X 7 BRK
62016	STR AXLE, 83” TRACK, 3/4"W, DISC	DB22, CONMET, LS, ALU HUB
62017	STR AXLE, 95” TRACK, 3/4” WALL	28.38” CAM, ALI, 10 SPL, 16.5 X 7 BRK

*ALI = ALIGNED CAMS ~ OPP = OPPOSED CAMS

TRAILER AXLES

F19S, F22S, F24S	20,000 LBS
F19H, F22H, F24H	22,500 LBS
F21S, F22T	25,000 LBS
F26S	30,000 LBS

F22	S	71	B	205	E
MODEL NO.	WALL	TRACK LENGTH	SPIDER	CAM LENGTH	CAM ENCLOSURES
F19	S = 1/2		BOLT ON = B	205 = 20.5”	E = YES
F21	H = 5/8		WELD ON = W		N = NO
F22	T = 3/4				
F24					
F26					

F19H71B205E	F19S71W205N	F22H89W236N	F22S77W236E
F19H75B205N	F19S75W205N	F22H89W265N	F22T71B205E
F19H77W236N	F22H38B075N	F22H94W265N	F22T77W236N
F19H77W265N	F22H75W265N	F22S34B075N	F22T83W265N
F19H83H265N	F22H77B236E	F22S71B205E	F22T89B265N
F19H89W265N	F22H77W236N	F22S71B236E	F22T94B295N
F19S34B075N	F22H83W205N	F22S71E236N	F22T94W265N
F19S71B205E	F22H83W236N	F22S71W205E	F24H77W236N
F19S71E205N	F22H83W265N	F22S77B236E	F26S77W205N

F22 FRICTION WELD AXLE

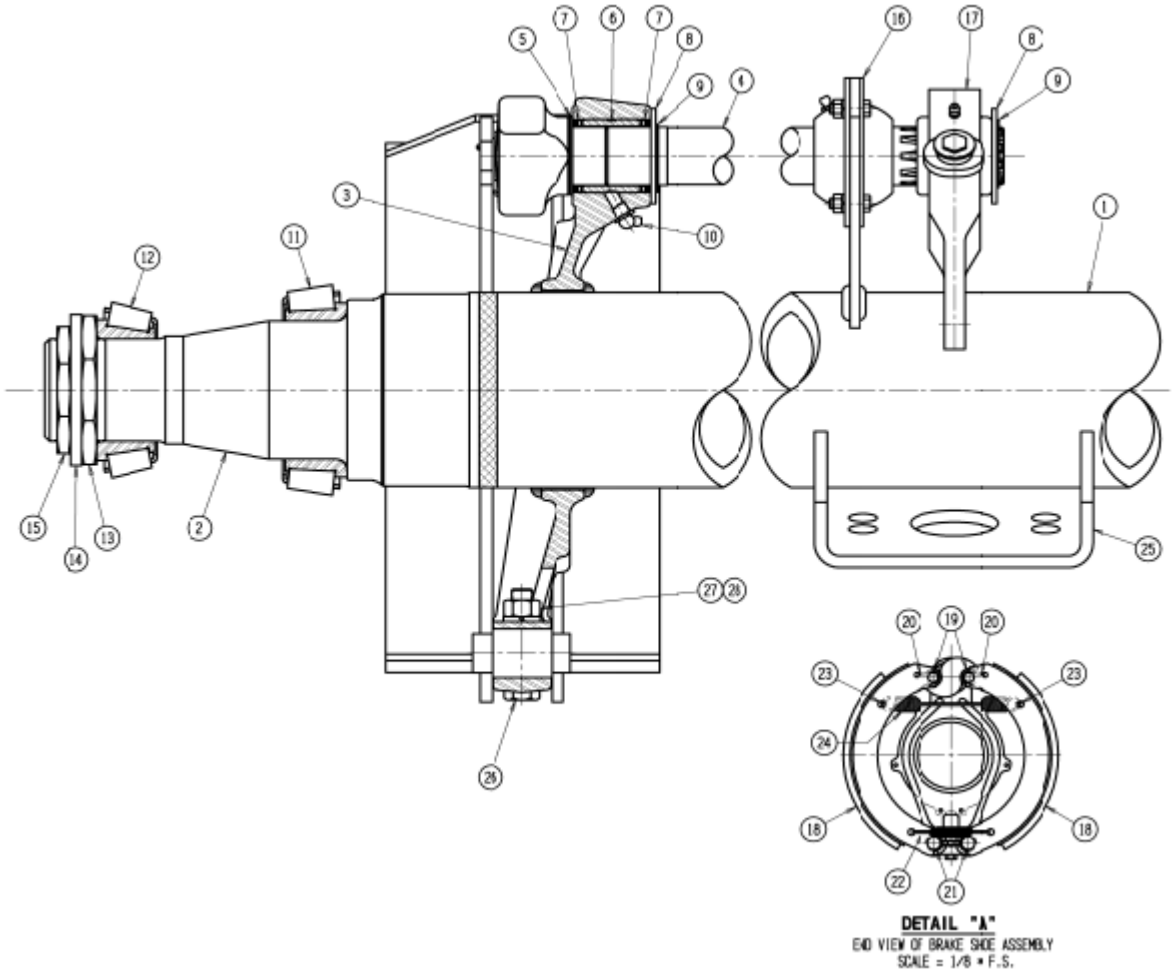

ITEM	PART #	DESCRIPTION	ITEM	PART #	DESCRIPTION
1	F22S715	AXLE TUBE	15	103102-001	OUTER JAM NUT
2	101132-S	F22 SPINDLE	16	209999-018	BRACKET ASSY
3	200114-001	BRAKE SPIDER (WELD ON)	17	212116	SLACK ADJUSTER
4	202100-205-RH	RH CAMSHAFT (20 5/8 U.H.)	18	601501-NAB718	BRAKE SHOE C/W LINING
4	202100-205-LH	LH CAMSHAFT (20 5/8 U.H.)	19	204101-001	ROLLER
5	403107	CAMSHAFT SPIDER WASHER	20	214103	ROLLER RETAINER
6	405129	SPIDER BUSHING	21	203501	ANCHOR PIN
7	408101	SPIDER SEAL	22	208502	RETAINER SPRING
8	403105	CAMSHAFT RETAINER WASHER	23	207100	RETURN SPRING RETNR
9	214104	RETAINING RING	24	208104	RETRACT SPRING
10	407102	GREASE FITTING	25	210177	AIR CHAMBER BRACKET
11	104115	INNER BEARING CONE	26	401101	SPIDER CLAMP BOLT
12	104108	OUTER BEARING CONE	27	403117	SPIDER CLAMP WASHER
13	103103-002	AXLE JAM NUT	28	402106	SPIDER CLAMP NUT
14	105107	INNER JAM NUT WASHER			

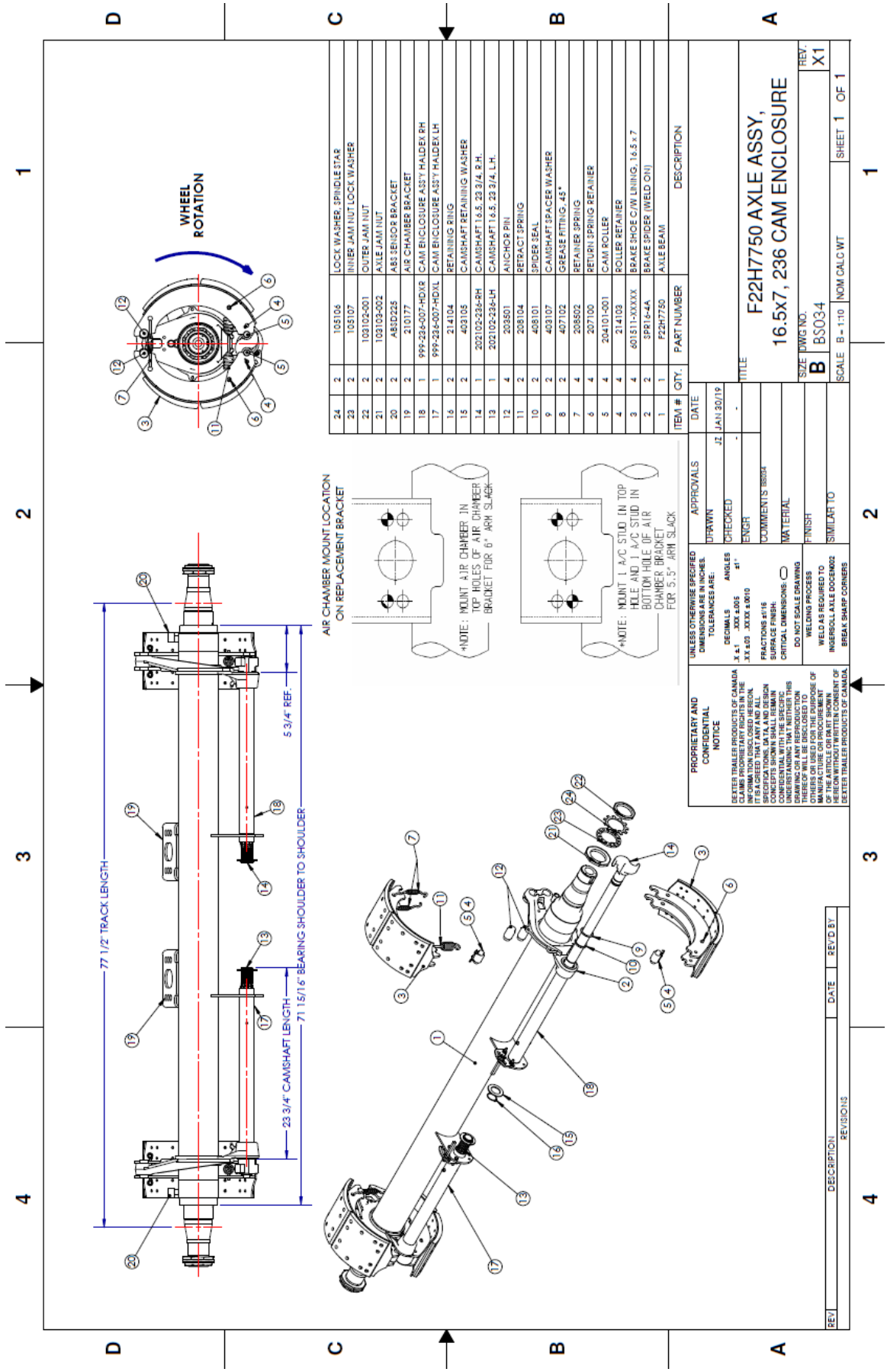

ITEM #	QTY.	PART NUMBER	DESCRIPTION
24	2	105106	LOCK WASHER, SPINDLE STAR
23	2	105107	INNER JAM NUT LOCK WASHER
22	2	103102-001	OUTER JAM NUT
21	2	103103-002	AXLE JAM NUT
20	2	A85D225	ABS SENSOR BRACKET
19	2	210177	AIR CHAMBER BRACKET
18	1	999-236-007-HDXR	CAM ENCLOSURE ASS'Y HALDEX RH
17	1	999-236-007-HDXL	CAM ENCLOSURE ASS'Y HALDEX LH
16	2	214104	RETAINING RING
15	2	403105	CAMSHAFT RETAINING WASHER
14	1	202102-236-RH	CAMSHAFT 16.5, 23 3/4, R.H.
13	1	202102-236-LH	CAMSHAFT 16.5, 23 3/4, L.H.
12	4	203501	ANCHOR PIN
11	2	208104	RETRACT SPRING
10	2	408101	SPIDER SEAL
9	2	403107	CAMSHAFT SPACER WASHER
8	2	407102	GREASE FITTING, 45°
7	4	208502	RETAINER SPRING
6	4	207100	RETURN SPRING RETAINER
5	4	204101-001	CAM ROLLER
4	4	214103	ROLLER RETAINER
3	4	801511-XXXXX	BRAKE SHOE C/W LINING, 16.5 x 7
2	2	SPR16-4A	BRAKE SPIDER (WELD ON)
1	1	F22H7750	AXLE BEAM

F22H8900 AXLE ASSEMBLY

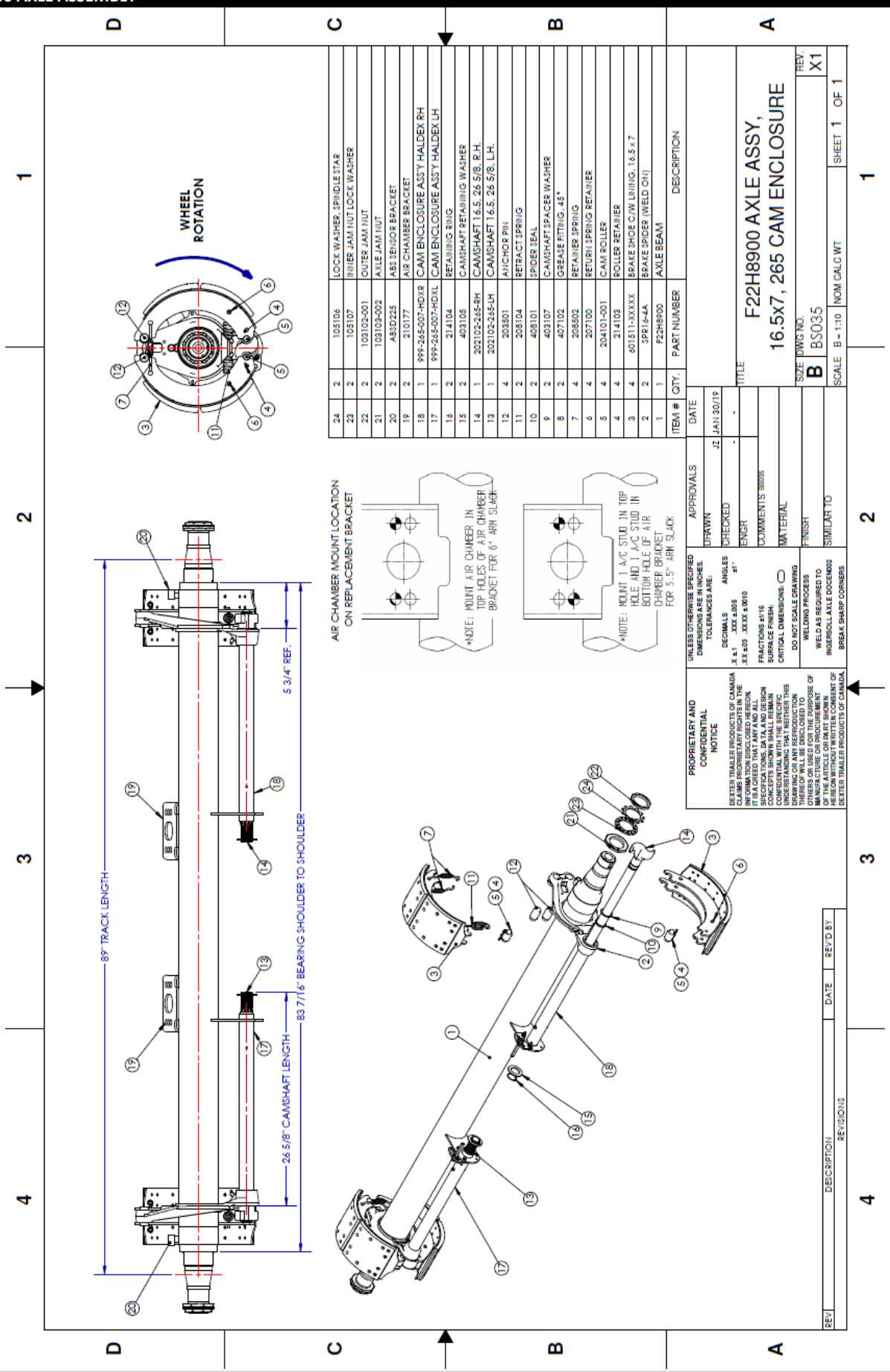

SELF-STEERING AXLE – STANDARD OPTIONS

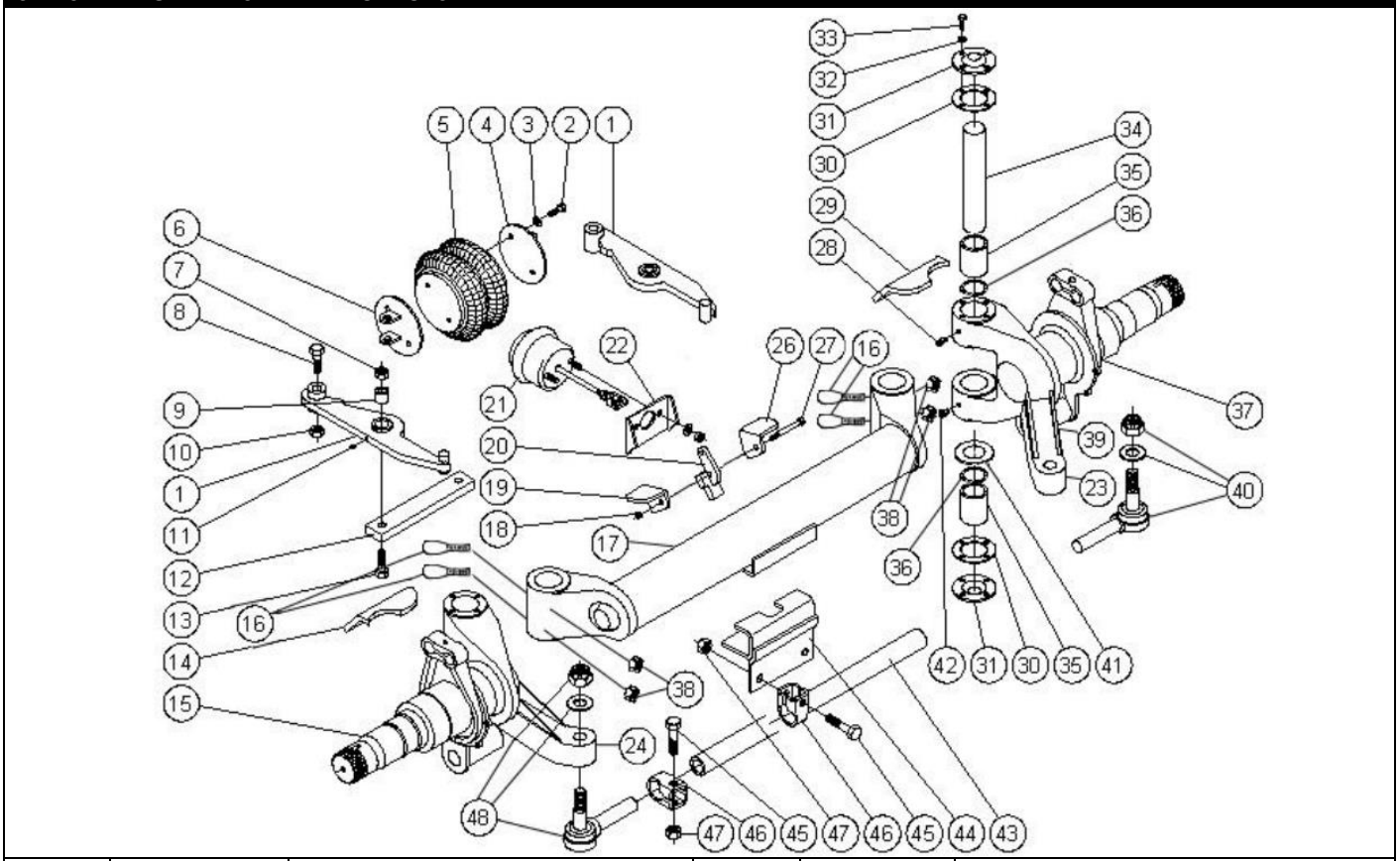

ITEM #	PART #	DESCRIPTION	ITEM #	PART #	DESCRIPTION
1	700232	TORPRESS MOUNTING ASSEMBLY	26	700190	RH LOCK BRACKET
2	700177	LEVER ARM MACHINED	27	700208	BOLT, 5/8 – 11 UNC-2A X 4” GR. 5
3	407100	GREASE FITTING, STRAIGHT	28	407100	GREASE FITTING, STRAIGHT
4	700182	PIVOT BUSHING	29	700347	BRAKE CHAMBER BRKT - RH
5	700206	BOLT, 3/8-16 UNC-2A X 7/8 , GR. 5	30	70075	KING PIN CAP GASKET
6	700097	WASHER, LOCK 3/8”	31	70076	KING PIN CAP
7	700179	ACTUATOR PAD WELDMENT – LH	32	70097	WASHER, LOCK, 3/8 NOM
8	W01-358-6910	STYLE 20 ARISTROCK ACTUATOR	33	70094	BOLT, 3/8 – 16 UNC-2A X 5/8, GR. 5
9	700754	BOLT, 1-8 UNC-2A X 5 1/2”, GR 8	34	70040L	KING PIN – LH
10	700178	ACTUATOR PAD WELDMENT – RH	35	70040R	KING PIN – RH
11	700204	NUT, 5/8-11 UNCE-2B, NYLOCK	36	700041	BUSHING (STRG KNUCKLE)
12	700208	BOLT, 5/8-11 UNC-2A X 4”, GR 5	37	700719	SPIDER
13	700207	BOLT, 5/8-11 UNC-2B, HEX JAM, GR 5	38	51005	HEX NUT
14	700346	BRAKE CHAMBER BRKT - LH	39	700661	REINFORCING GUSSET
15	700047	STEERING KNUCKLE	40	700561	TIE ROD END – RH
16	700660	DRAW KEY	41	700043	THRUST WASHER
17	700153	AXLE BEAM	42	700068	GREASE FITTING, 45 DEG.
18	700204	NUT, 5/8 – 11 UNC -27 NYLOCK	43	407102	TIE ROD, 40” LENGTH
19	700191	LH LOCK BRACKET	44	700057	PUSH/LOCK PLATE
20	700212	TIE ROD LOCK	45	700409	BOLT, 3/4 – 10 UNC-2A X 3 3/4, GR 5
21	217009-050	TYPE 9 AIR CHAMBER – 5” ROD	46	700092	LOCKING CLAMP
22	700192	TYPE 9 AIR CHAMBER BRACKET	47	700065	NUT, 3/4 – 10 UNC – 24, NYLOCK
23	700526	STEERING ARM – RH	48	700091	TIE ROD END – LH
24	700525	STEERING ARM – LH			

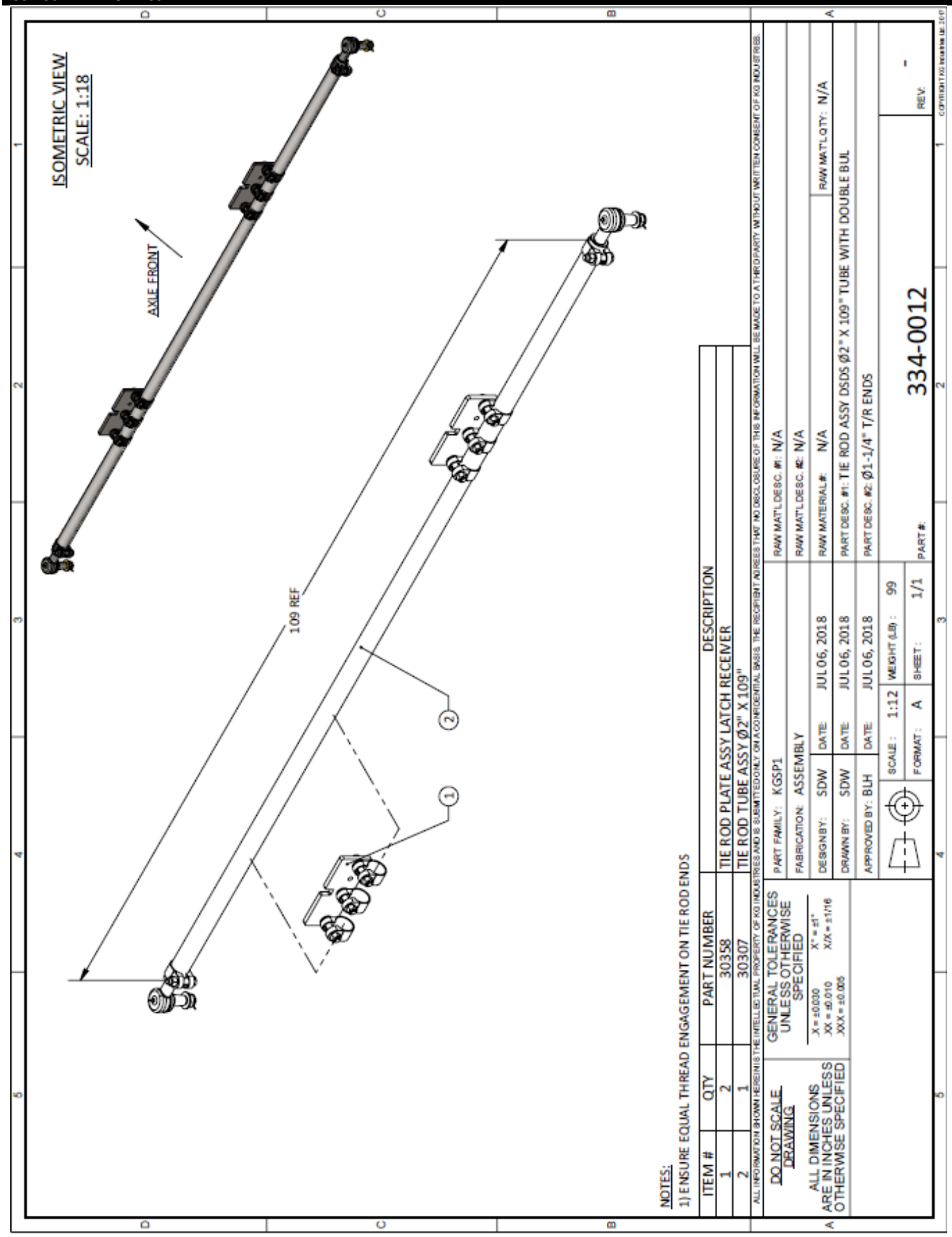
ISOMETRIC VIEW
SCALE: 1:18
AXLE FRONT
109 REF
2
1
NOTES:
1) ENSURE EQUAL THREAD ENGAGEMENT ON TIE ROD ENDS
ITEM # | QTY | PART NUMBER | DESCRIPTION
1 | 2 | 30358 | TIE ROD PLATE ASSY LATCH RECEIVER
2 | 1 | 30307 | TIE ROD TUBE ASSY Ø2" X 109"
ALL INFORMATION SHOWN HEREIN IS THE INTELLECTUAL PROPERTY OF KG INDUSTRIES AND IS SUBMITTED ONLY ON A CONFIDENTIAL BASIS. THE RECIPIENT AGREES THAT NO DISCLOSURE OF THIS INFORMATION WILL BE MADE TO A THIRD PARTY WITHOUT WRITTEN CONSENT OF KG INDUSTRIES.
DO NOT SCALE DRAWING
ALL DIMENSIONS ARE IN INCHES UNLESS OTHERWISE SPECIFIED
GENERAL TOLERANCES UNLESS OTHERWISE SPECIFIED
.X = ±0.030 .XX = ±0.010 .XXX = ±0.005
X° = ±1° X/X = ±1/16
PART FAMILY: KGSP1
FABRICATION: ASSEMBLY
DESIGN BY: SDW DATE: JUL 06, 2018
DRAWN BY: SDW DATE: JUL 06, 2018
APPROVED BY: BLH DATE: JUL 06, 2018
SCALE: 1:12 WEIGHT (LB): 99
FORMAT: A SHEET: 1/1
RAW MAT'L DESC. #1: N/A
RAW MAT'L DESC. #2: N/A
RAW MATERIAL #: N/A
RAW MAT'L QTY: N/A
PART DESC. #1: TIE ROD ASSY DSDS Ø2" X 109" TUBE WITH DOUBLE BUL
PART DESC. #2: Ø1-1/4" T/R ENDS
PART #: 334-0012
REV: -
COPYRIGHT KG Industries LLC 2017

330-0012 GENERAL ASSY

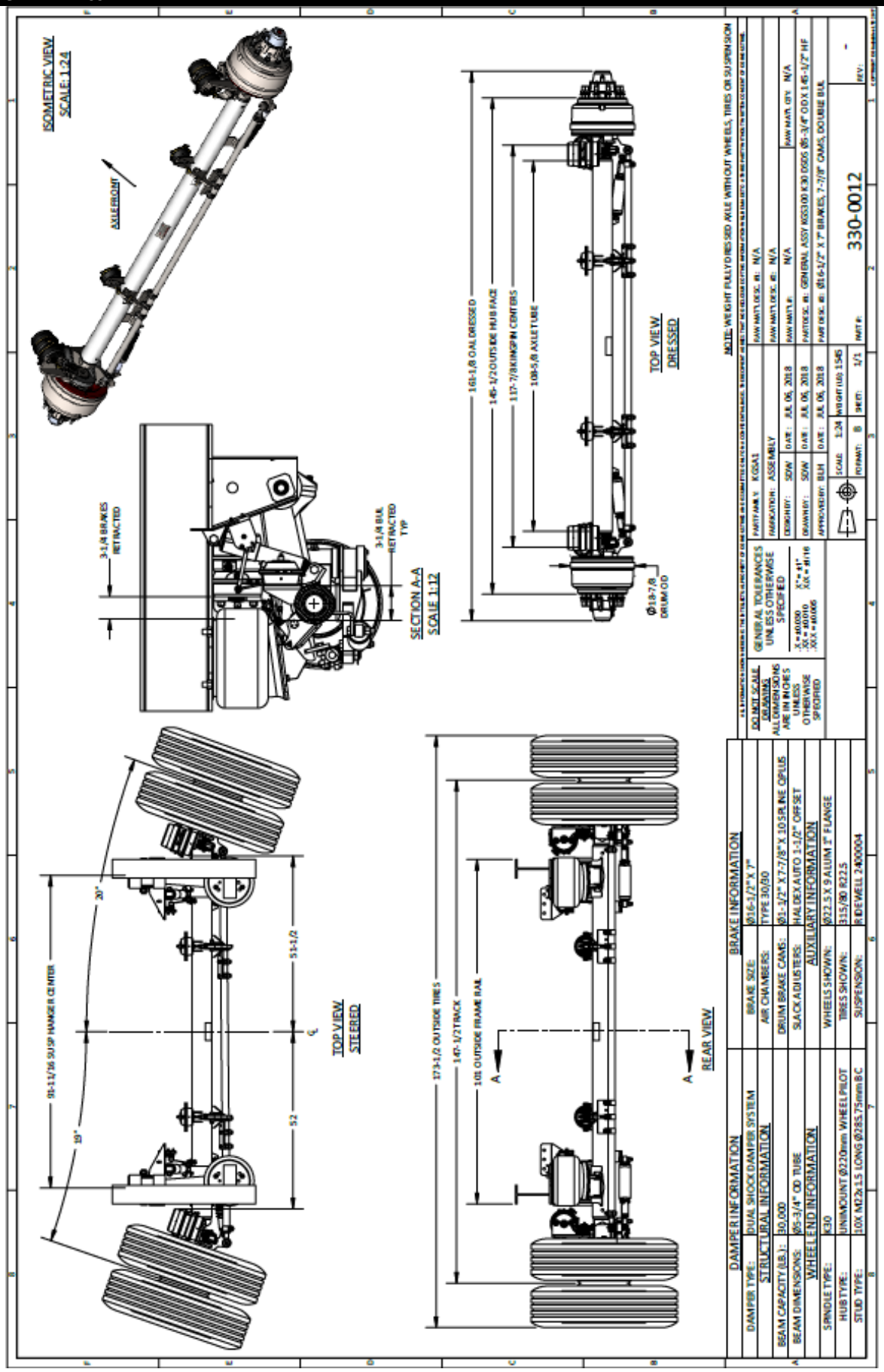

330-0012-002 GENERAL ASSY

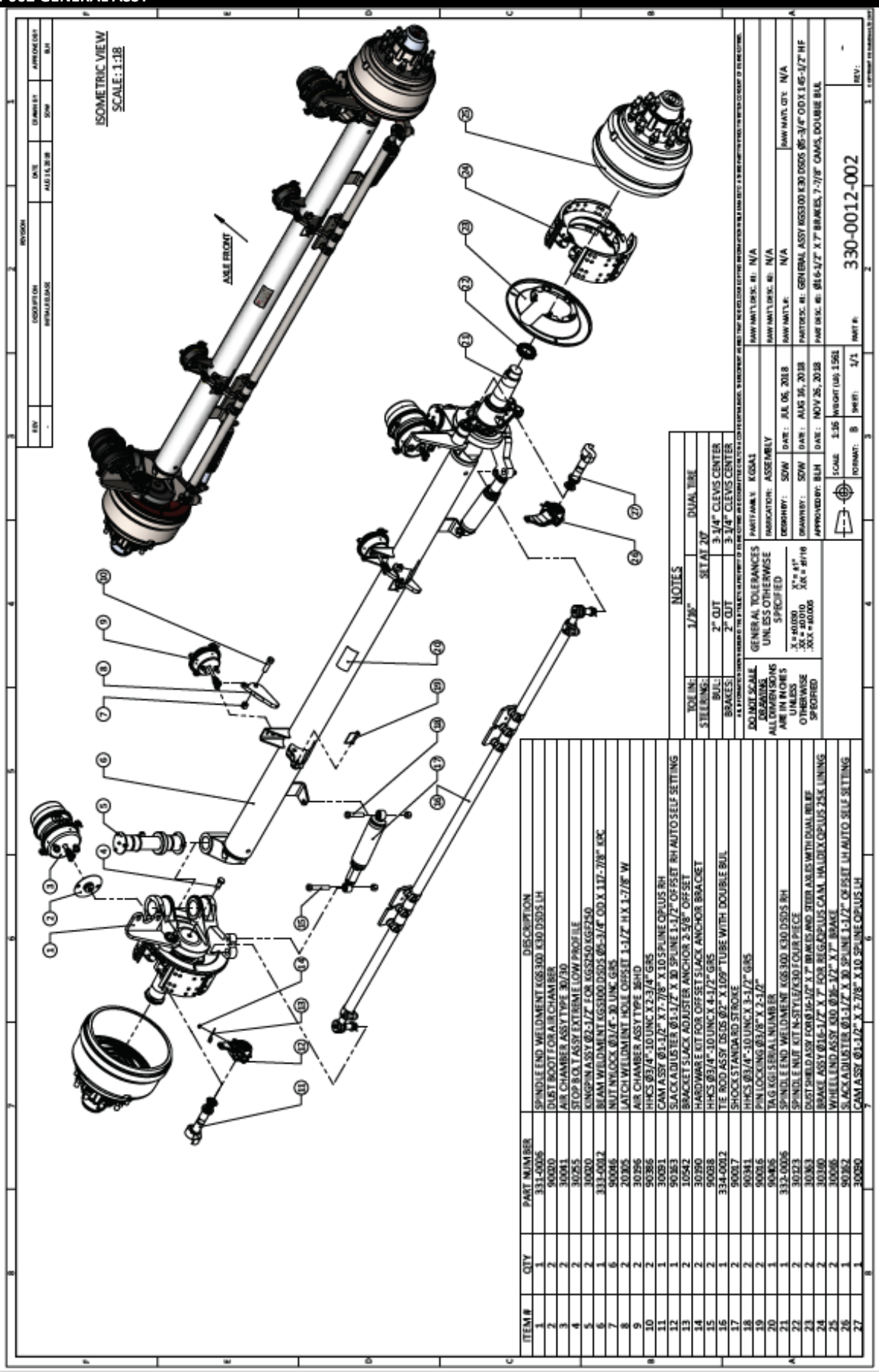

ITEM #	QTY	PART NUMBER	DESCRIPTION
1	1	333-0006	SPINDLE END WELDMENT KGS300 K30 DSDS LH
2	2	90020	DUST BOOT FOR AIR CHAMBER
3	2	30041	AIR CHAMBER ASSY TYPE 30/30
4	2	30255	STOP BOLT ASSY EXTREME LOW PROFILE
5	2	30020	KINGPIN ASSY @2-1/2" FOR KGS250 KGF250
6	1	333-0012	BEAM WELDMENT KGS300 DSDS @5-3/4" OD X 137-7/8" KPC
7	6	90046	NUT NYLOCK @3/4"-10 UNC GR5
8	2	20305	LATCH WELDMENT HOLE OFFSET 1-1/2" H X 1-7/8" W
9	2	30296	AIR CHAMBER ASSY TYPE 36HD
10	2	90386	HHCS @3/4"-10 UNC X 2-3/4" GR5
11	1	30091	CAM ASSY @1-1/2" X 7-7/8" X 10 SPLINE OPLUS RH
12	1	90353	SLACK ADJUSTER @1-1/2" X 30 SPLINE 1-1/2" OFFSET RH AUTO SELF SETTING
13	2	10542	BRACKET SLACK ADJUSTER ANCHOR 2 5/8" OFFSET
14	2	30290	HARDWARE KIT FOR OFFSET SLACK ANCHOR BRACKET
15	2	90088	HHCS @3/4"-10 UNC X 4-1/2" GR5
16	1	334-0012	TIE ROD ASSY DSDS @2" X 109" TUBE WITH DOUBLE BUL
17	2	90017	SHOCK STANDARD STROKE
18	2	90341	HHCS @3/4"-10 UNC X 3-1/2" GR5
19	2	90016	PIN LOCKING @3/8" X 2-1/2"
20	2	90406	TAG KGS SERIAL NUMBER
21	1	332-0006	SPINDLE END WELDMENT KGS300 K30 DSDS RH
22	2	30123	SPINDLE NUT KIT N-STYLE/K30 FOUR PIECE
23	2	30363	DUST SHIELD ASSY FOR @16-1/2" X 7" BRAKES AND STEER AXLES WITH DUAL RELIEF
24	2	30360	BRAKE ASSY @16-1/2" X 7" FOR REGROPLUS CAM, HALDEX OPLUS 25K LINING
25	2	30006	WHEEL END ASSY K30 @36-1/2" X 7" BRAKE
26	1	90362	SLACK ADJUSTER @1-1/2" X 30 SPLINE 1-1/2" OFFSET LH AUTO SELF SETTING
27	1	30090	CAM ASSY @1-1/2" X 7-7/8" X 10 SPLINE OPLUS LH

30360 BRAKE ASSY

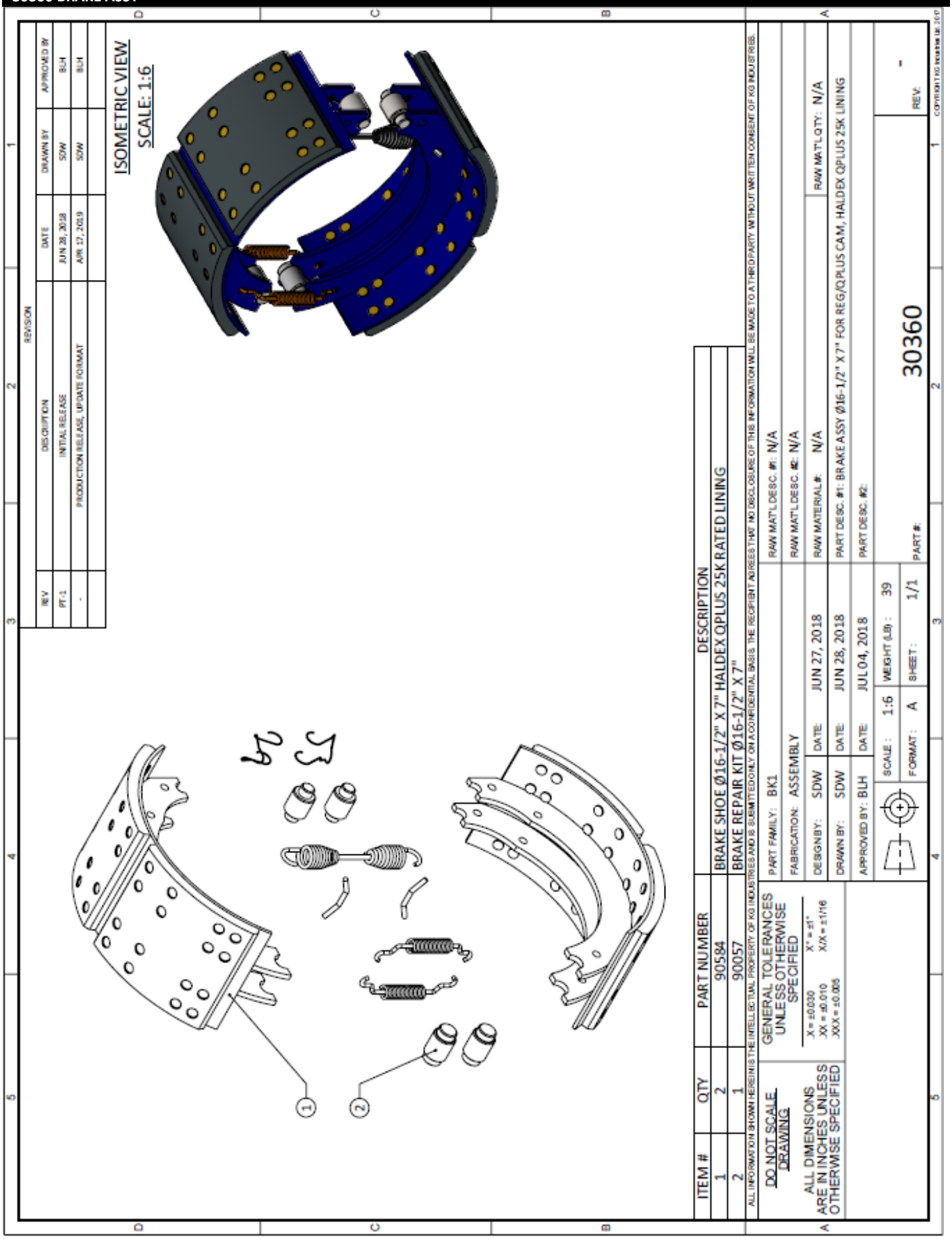

30196 AIR CHAMBER ASSY

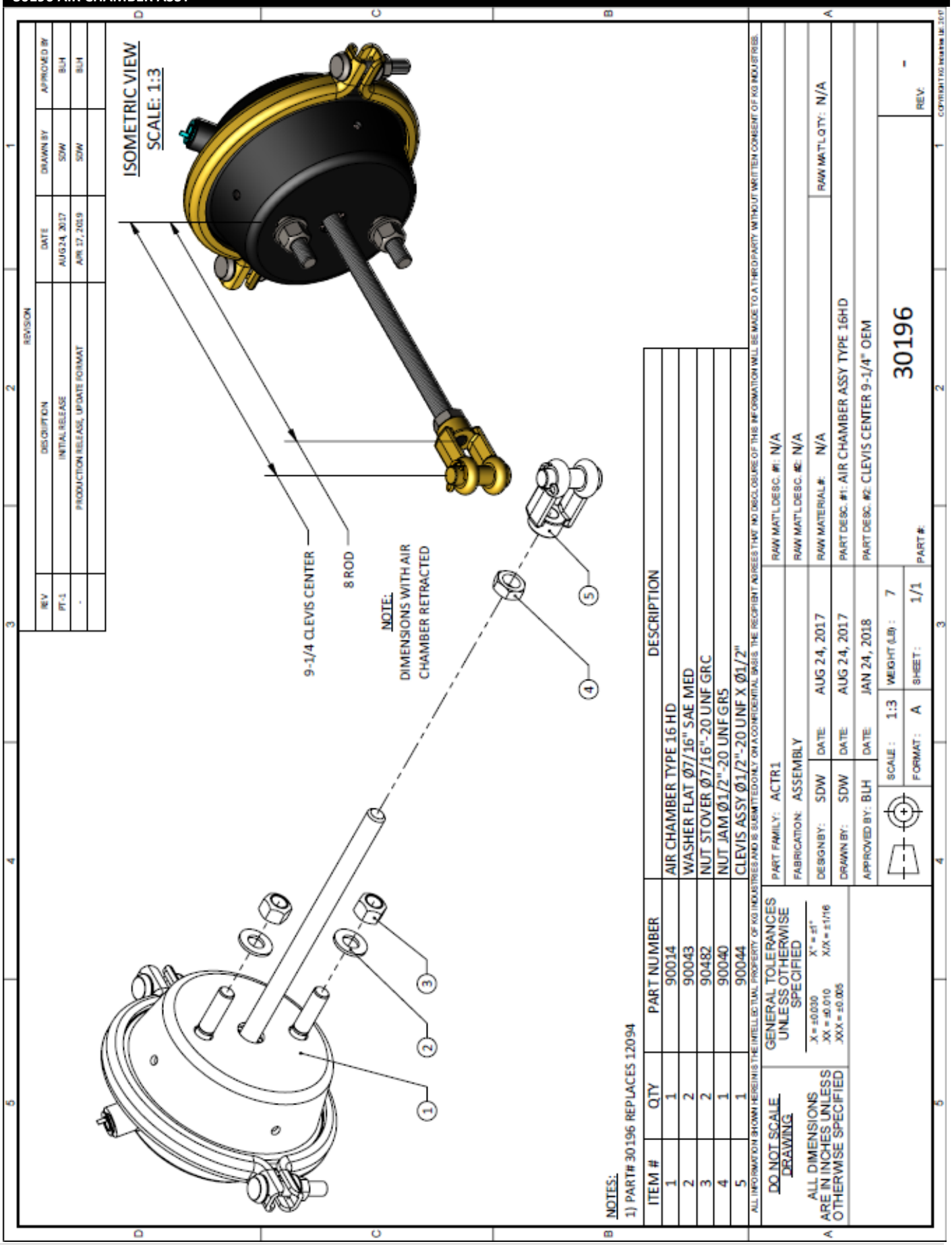

30123 SPINDLE NUT KIT

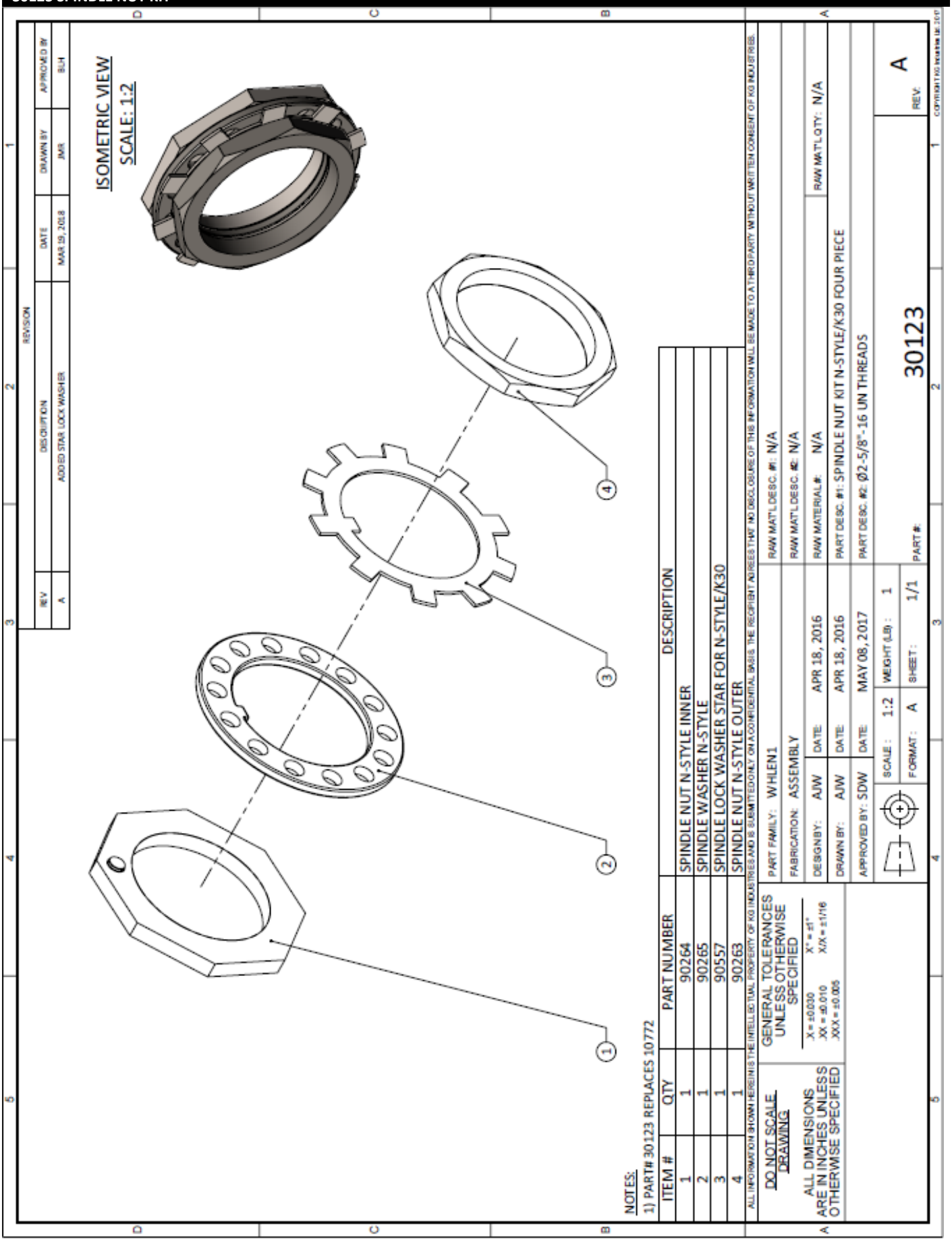

30041 AIR CHAMBER ASSY TYPE 30/30

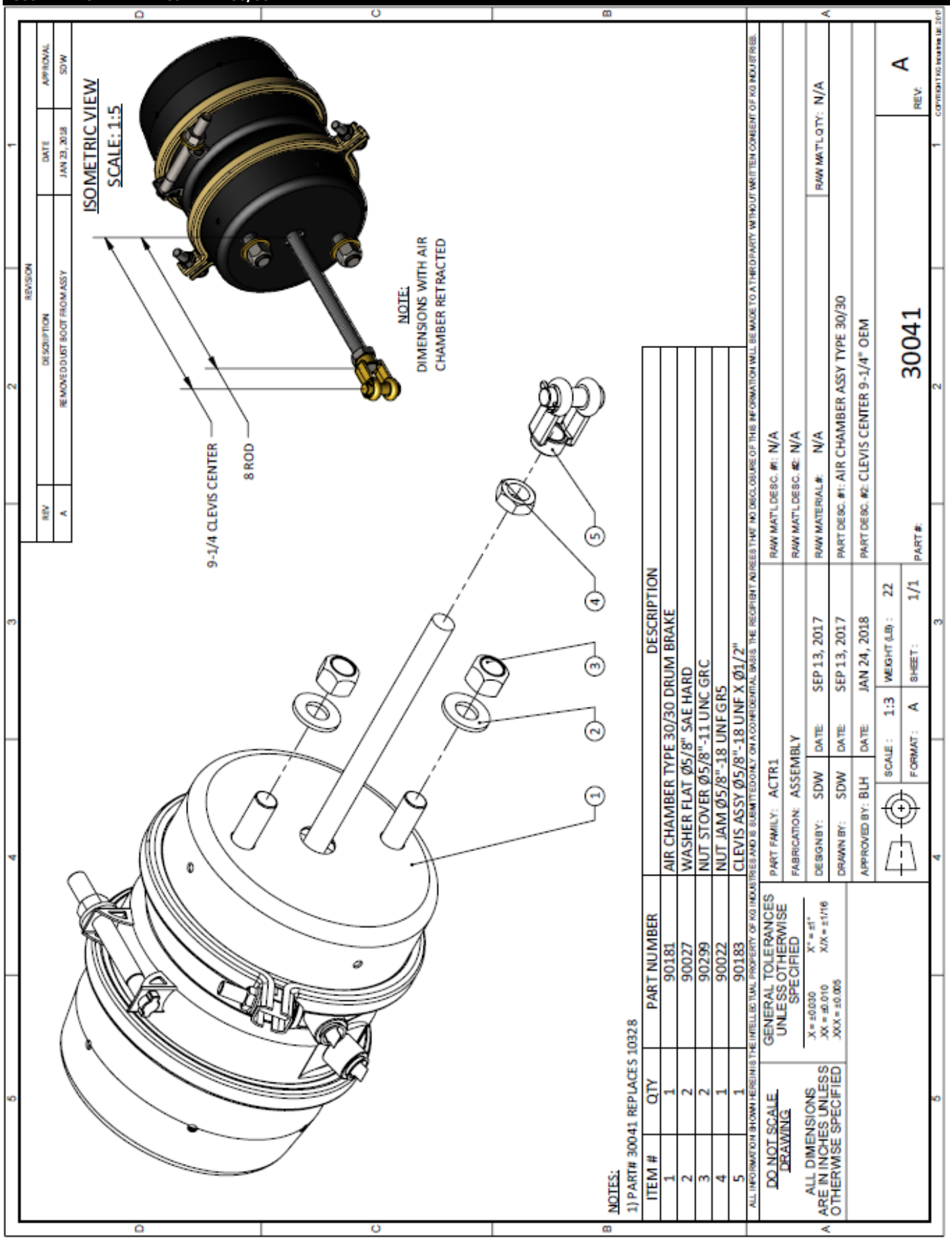

30065 WHEEL END ASSY 16 1/2 X 7”

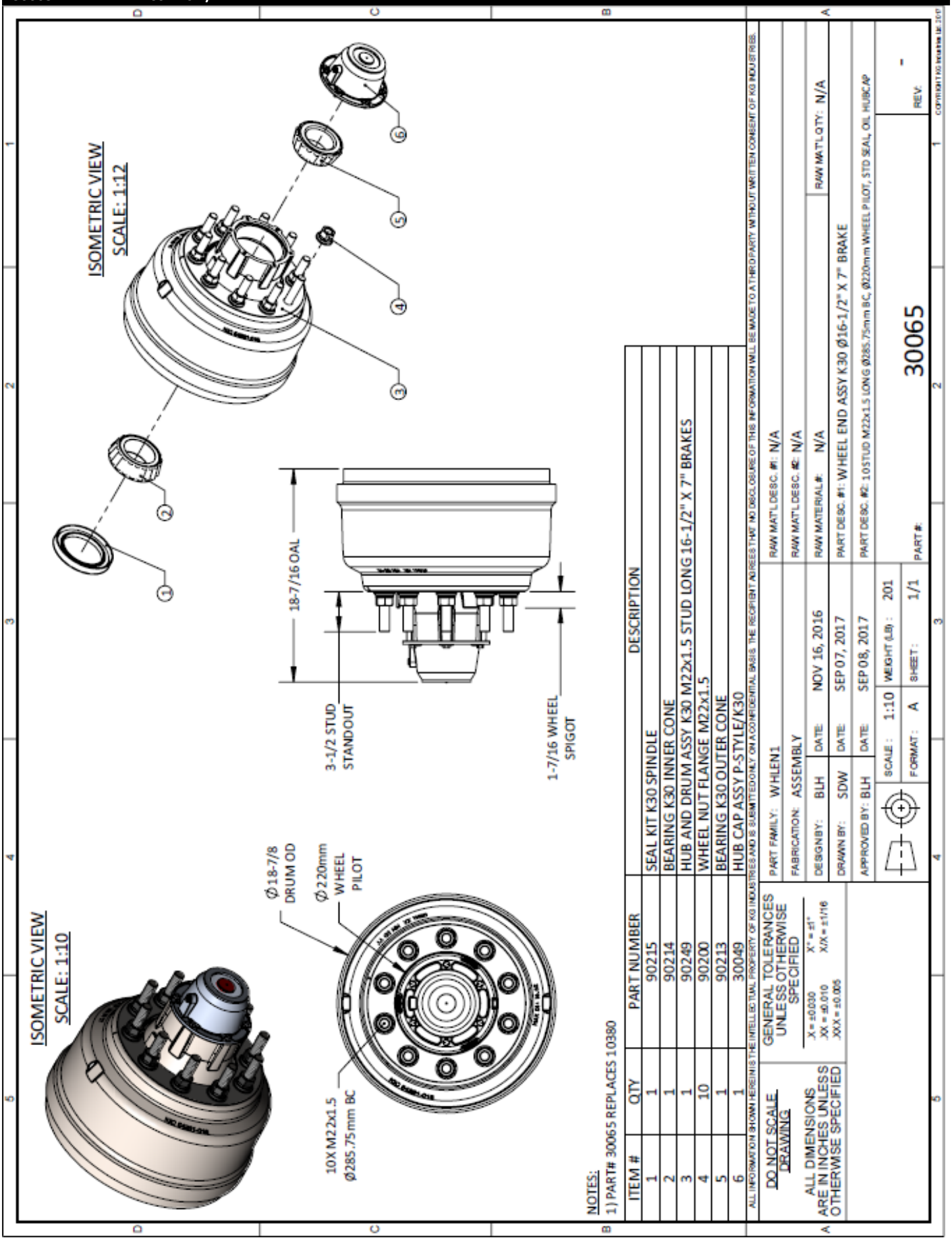

30020 KING PIN ASSY

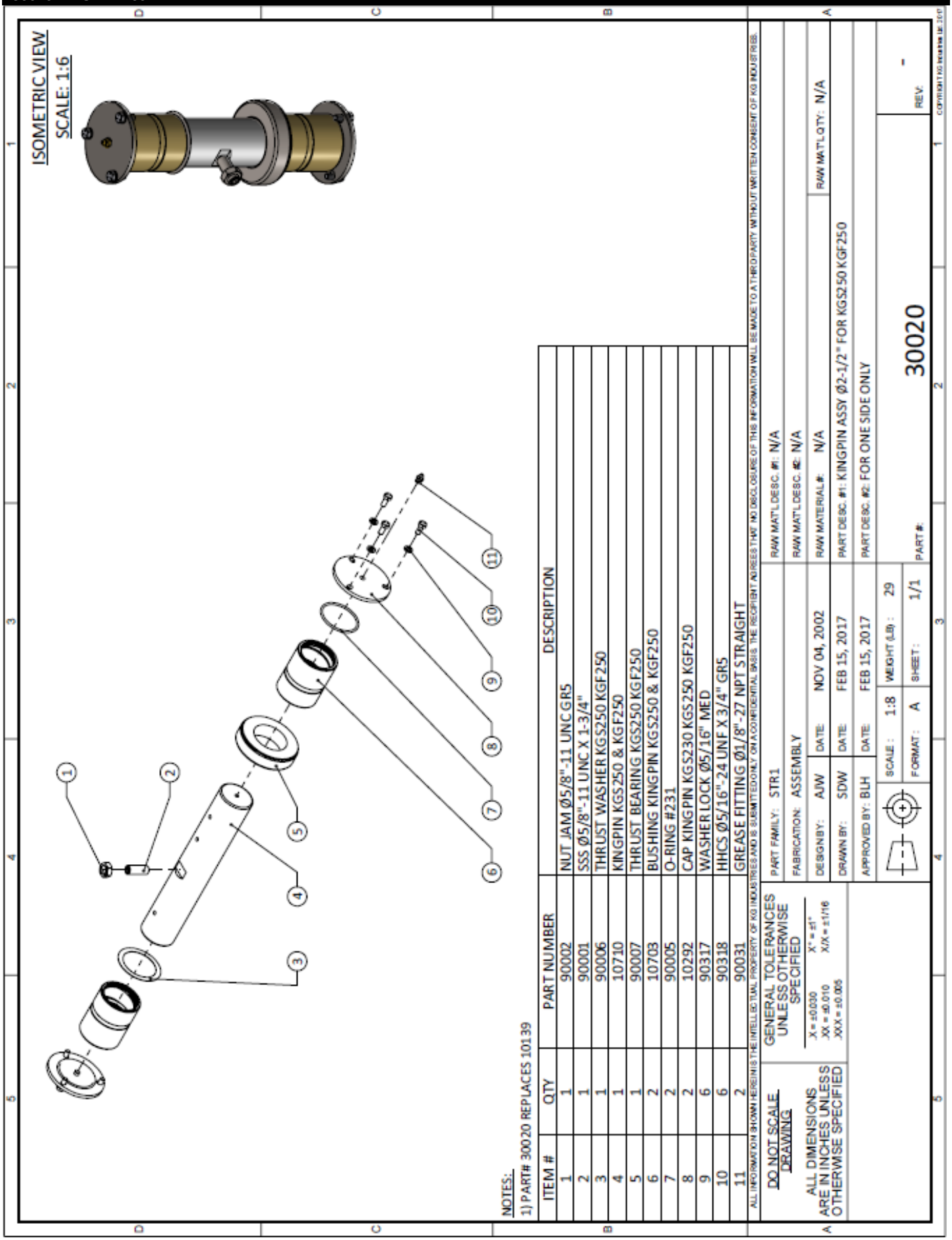

30307 TIE ROD TUBE ASSY

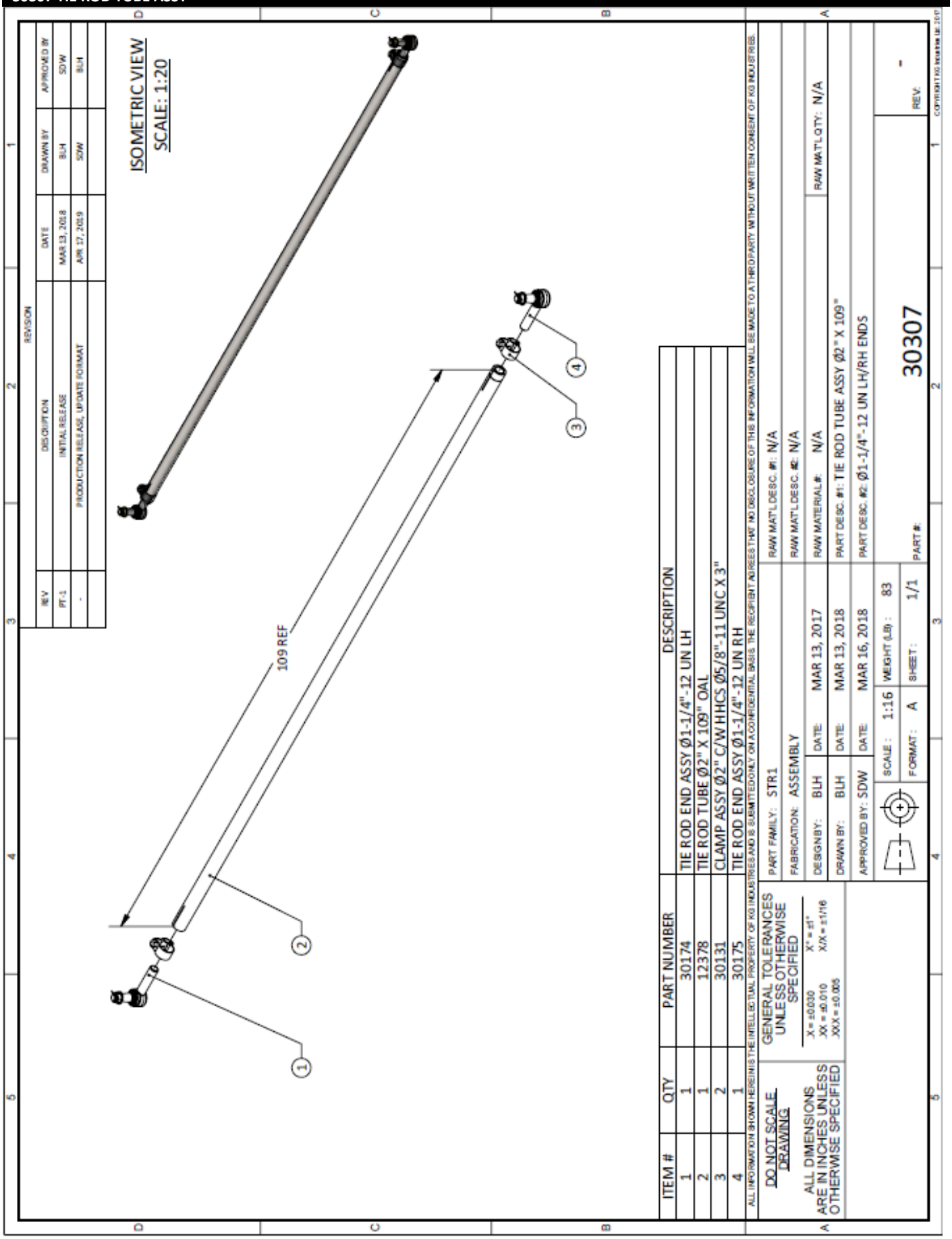

30358 TIE ROD ASSY LATCH RECEIVER

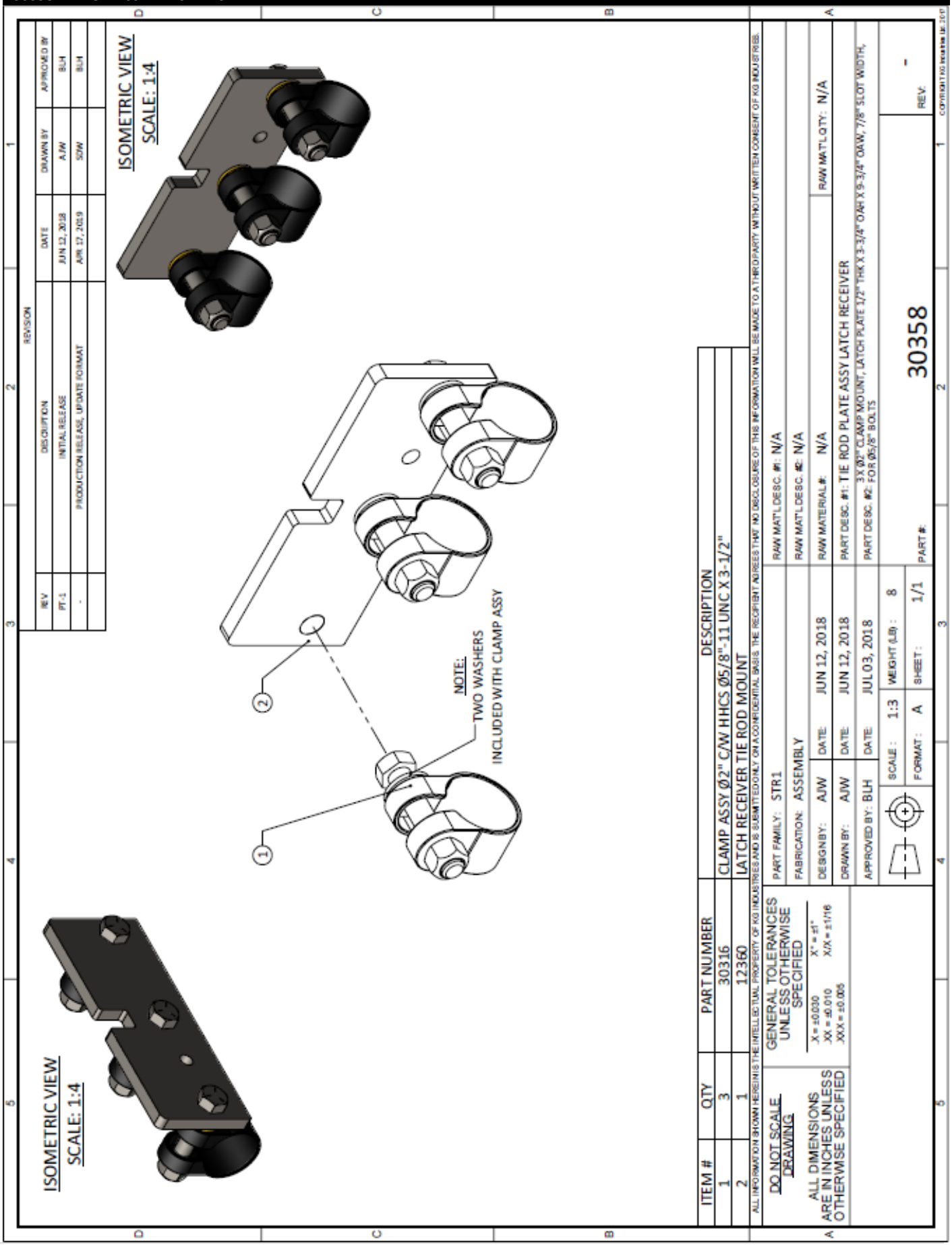

AXLE COMPONENTS

TRAILER CAMSHAFT

LEFT HAND CAM

RIGHT HAND CAM

PART #	PEERLESS #	SPLINE	LENGTH	DESCRIPTION
04-570741		10	7 3/4	16 WHEEL SUSPENSION
04-572042		10	20 1/2	TRACK
04-572351		10	23 7/16	INGERSOLL 77” TRACK
04-572652		10	26 1/2	LOWBED S 9’ & WIDER
S-23857-1L		10		INTRAXX
S-23857-1R		10		INTRAXX
S-24636-1L		28		INTRAXX
S-24636-1R		28		INTRAXX
202102-075LH		10	7 1/2”	Q-PLUS
202102-075RH		10	7 1/2”	Q-PLUS
202102-205L		10		20.5” Cam length
202102-205R		10		
202102-206-5L		10		
202102-236L		10		
202102-236R		10		
202102-245L		10		
202102-245R		10		
202102-265LH		10		
202102-265RH		10		
202102-283LH		10		
202102-283RH		10		

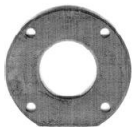

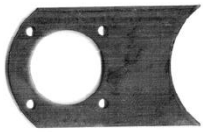

PART #	DESCRIPTION	PART #	DESCRIPTION
84106	CAM TUBE ADAPTOR PLATE	03-116	CAM TUBE ADAPTOR BRACKET

DIFFERENCE BETWEEN Q AND Q+ CAM

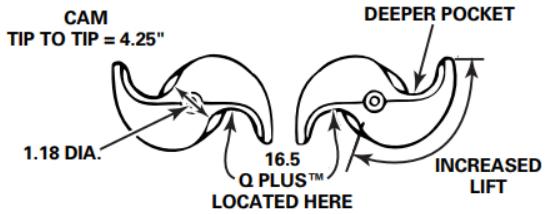

16.5" Q PLUS™ CAMSHAFT (1.5" DIA.-28 SPLINES)

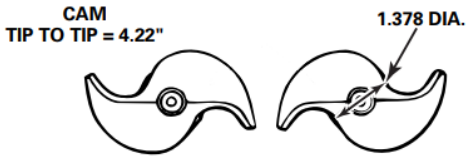

16.5" Q CAMSHAFT (1.5" DIA.-10 OR 28 SPLINES)

TRAILER CAM ENCLOSURES

PART #	APPLICATION	CAM #	CAM COVER LENGTH
90512	8’ TRAILER	04-572041/2	17 7/8”
85995-236	8’6” TRAILER	04-572351/2	21 1/4”
85995-245		04-572441/2	22”
85994-265	LOWBED TRAILERS	04-572651/2	24 1/4”
85994-105	CHASSIS AXLES		8 3/8”
007-R-1	INTRAAX 2” OD	04-861121/2	8 3/8”
007-R-2	INTRAAX 2 1/8” OD	04-871121/2	

BEARINGS

PART #	DESCRIPTION	PART #	DESCRIPTION
63400	BEARING CONE, KML, HM212049	63401	BEARING, CONE, KML, HM218248

TRAILER AXLES

DESCRIPTION	INNER CUP	INNER CONE	OUTER CUP	OUTER CONE
STD. FORGE A19 ROCKWELL TL, RL, TK	653	663	212011	212049
STD. FORGE A21	742	749	632	643
STD. FORGE A22 ROCKWELL, TN, TQ, RN, RQ, KB – KBS, KBW-7	218210	218248	212011	212049
STD. FORGE A26 KB – T30	752	759	742	740
STD. FORGE A40	772	787	6535	6588
FRUEHAUF SF A24	518410	518445	518410	518445

TRUCK AXLES

DESCRIPTION	INNER CUP	INNER CONE	OUTER CUP	OUTER CONE
FF 900	212011	212044	3720	3782
FF 900 & FF 920	212011	212047	3720	3782
FL 900	6420	6461A	552A	555S
SLHD	572	582	42620	42687
SUD & SFD	752	760	742	749
SQD, SQHD, SRD, SSHD	592A	598A	572	580

SEALS

KIT NUMBER	AXLE RING	OIL SEAL	COMMON AXLE APPLICATION	KIT NUMBER	AXLE RING	OIL SEAL	COMMON AXLE APPLICATION
372 7007	310 1048	320 2048	REFER TO 372 7043	382 8045	310 1028	320 2041	FORD
372 7012	310 1037	320 2040	REFER TO 372 7044	382 8046	310 1093	320 2043	INTERNATIONAL
372 7013	310 1013	320 2109	IK A19	382 8064	310 1037	320 2137	FL 900
372 7015	310 1043	320 2041	A265S	382 8067	310 1093	320 2165	INTERNATIONAL
372 7021	310 1004	320 2006	FRUEHAUF #1	392 9001	310 1095	320 2001	SFD 4600 & SFD 4640
372 7022	310 1022	320 2023	FRUEHAUF #5 THRU 1959	392 9002	310 1093	320 2002	REFER TO 390-9003
372 7023	310 1023	320 2023	PROPAR	392 9003	310 1093	320 2129	MACK
372 7024	310 1023	320 2004		392 9005	310 1093	320 2005	REFER TO 390 9064
372 7043	310 1048	320 2110	RN, TKN, TN, TQ & A22S	392 9012	310 1012	320 2012	REFER TO 390 9056
372 7044	310 1037	320 2118	RL, TKL, & TL	392 9021	310 1021	320 2021	INTERNATIONAL
372 7091	310 1059	320 2173	A21S	392 9048	310 1067	320 2097	MACK
372 7096	315 1506	320 2111	A45S	392 9050	310 1067	320 2067	MACK
372 7097	315 1504	320 2110	A22S, BN, TKN, TN & TQ	392 9056	310 1091	320 2102	INTERNATIONAL & FORD
372 7098	315 1507	320 2109	TK, A19	392 9060	310 1111	320 2115	GMC TANDEM
372 7099	310 1503	320 2023	PROPAR A24	392 9054	310 1093	320 2113	EATON
382 8011	310 1051	320 1031	MACK	392 9065	310 1026	320 2114	EATON
382 8012	310 1055	320 2052	FE15, FK & FN	392 9070	310 1111	320 2162	R 143 & SSHD
382 8030	310 1030	320 2030	WHITE & FREIGHTLINER	392 9073	310 1111	320 2106	SOD, SQHD, SRD & SSHD
382 8032	310 1032	320 2032	WHITE & FREIGHTLINER	392 9087	315 1502	320 2162	R 143 & SSHD
382 8036	310 1036	320 2036	FE 900, FF 900 & FF 920	392 9088	315 1517	320 2113	EATON
382 8037	310 1037	320 2033	REFER TO 380 8064	392 9096	315 1508	320 2114	EATON
382 8039	310 1038	320 2039	MACK	392 9098	315 1502	320 2106	SOD, SOHD, SRD, SSHD
382 8044	310 1008	320 2105	FORD	392 9099	315 1501	320 2102	INTERNATIONAL & FORD

AUTOMATIC SLACK ADJUSTER

HALDEX

PART #	DESCRIPTION
400-10216	10 SPLINE 6” PIN SPACING
400-10212	28 SPLINE 6” PIN SPACING
409-10445	5/8” OFFSET 10 SPLINE 6” PIN SPACING LH
409-10446	5/8” OFFSET 10 SPLINE 6” PIN SPACING RH
409-10375	1 1/2” OFFSET 10 SPLINE 6” PIN SPACING LH
409-10376	1 1/2” OFFSET 10 SPLINE 6” PIN SPACING RH

GUNITE

PART #	DESCRIPTION
SA09903	

MERITOR

PART #	DESCRIPTION
63442	SLACK ADJ, AUTO, 6” ARM, MERITOR
63523	SLACK ADJ, AUTO, 5.5” ARM, MERITOR

MANUAL SLACK ADJUSTER

PART #	DESCRIPTION
05-203EQ	3 HOLE 10 SPLINE 5”-6”-7” PIN SPACING

PART #	DESCRIPTION
05-201EQ	2 HOLE 10 SPLINE 5 1/2”-6 1/2” PIN SPACING

PART #	DESCRIPTION
05-238EQ	3 HOLE 18 SPLINE 5”-6”-7” PIN SPACING

PART #	DESCRIPTION
05-237EQ	2 HOLE 28 SPLINE 5 1/2”-6 1/2” PIN SPACING
05-240EQ	FRUHEHAUF 37 SPLINE 6” SPACING

PART #	DESCRIPTION
05-217	1 1/2” OFFSET 10 SPLINE 6” PIN SPACING LH
05-216	1 1/2” OFFSET 10 SPLINE 6” PIN SPACING RH

TRAILER STEEL HUB & DRUMS

PART #	AXLE	DESCRIPTION	BEARING/CUPS
20231UQLM/R	F22	OUTBOARD BALL SEAT 16 1/2 X 7”	218210/202011
20271CW3T80	F22	PILOT 8 STUD 12 1/4 X 7 1/2” ABS	218210/202011
20275CW3	F22	PILOT 8 STUD 12 1/4 X 7 1/2”	218210/212011
20231UQ3	F22	PILOT SHORT STUD 16 1/2 X 7”	218210/212011
20231UQ3T	F22	PILOT SHORT STUD 16 1/2 X 7” ABS	218210/212011
20231UQ5	F22	PILOT LONG STUD 16 1/2 X 7”	218210/212011
20231UQ5T	F22	PILOT LONG STUD 16 1/2 X 7” ABS	218210/212011
20281UF3	F22	PILOT 8 STUD 16 1/2 X 7”	218210/212011
20281UF3T	F22	PILOT 8 STUD 16 1/2 X 7” ABS	218210/212011
23431UF5	F24	PILOT 8 STUD 16 1/2 X 8 5/8”	518410
23431UF5T	F24	PILOT 8 STUD 16 1/2 X 8 5/8: ABS	518410
24011RH5	A26	PILOT 10 STUD 16 1/2 X 7”	742/752
13-3052Q		NUT, 10 STUD UNI-MOUNT	

ALUMINUM TRAILER HUBS

PART #	AXLE	DESCRIPTION
105752	F22	8 STUD PILOT LONG STUD
105760	F22	8 STUD PILOT LONG STUD ABS
105768	F22	10 STUD PILOT LONG STUD
105776	F22	10 STUD PILOT LONG STUD ABS
10005477	F22	10 STUD PILOT LONG STUD PRESET
10005480	F22	10 STUD PILOT LONG STUD ABS PRESET
10001198	F24	10 STUD PILOT LONG STUD ABS
10001204	F24	10 STUD PILOT LONG STUD ABS PRESET

CAST SPOKE HUB & DRUMS

Special Order, not in stock

STANDARD SPOKE

PART #	AXLE	DESCRIPTION	BEARINGS	CUPS	OTHER NO.
75209GCA	F22	20” 5 SPOKE	HM212011	HM218210	5763-1/904
75229GCA	F22	22” 5 SPOKE	HM212011	HM218219	5772-1/920
76209GCA	F22	20” 6 SPOKE	HM212011	HM218210	5744-3/909
76229GCA	F22	22” 6 SPOKE	HM212011	HM218210	5774-1/922

MISC. SPOKE

PART #	AXLE	DESCRIPTION	BEARINGS	CUPS	OTHER NO.
83223GCA	A19	22” 3 SPOKE	HM212011	653	9793
85223GCA	A19	22” 5 SPOKE	HM212011	653	5771-1/7841
	A19	22” 6 SPOKE	HM212011	653	5773-1/8211
	A21	22” 6 SPOKE	742	632	7194
	A26	20” S SPOKE	752	742	14334
	A26	22” 6 SPOKE	752	742	9978
	A26	24” 6 SPOKE	752	742	9347
5580ZHCA	FRU	20” 5 SPOKE		HM518410	9080/8990
5582ZHCA	FRU	22” 5 SPOKE		HB518410	9280/9170

TRAILER DUSTSHIELDS

PART #	DESCRIPTION	PART #	DESCRIPTION	PART #	DESCRIPTION	PART #	DESCRIPTION
02-515	STD TRAILER	1111	ROCKWELL TRAILER	550	PLASTIC 5” ROUND	S-23579/2	CLAMP-ON
02-507	HEAVY DUTY	02-515	ROCKWELL TRAILER	QCR1200	12 1/4” BRAKES	S28500-1650	CLAMP-ON
				211107	STEEL CLAMP-ON		

CLEVIS & PINS

PART #	DESCRIPTION	PART #	DESCRIPTION
10026A	CLEVIS ASSEMBLY 1/2 TH X 1/2 PIN	10026A-1	1/2” PIN
10026B	CLEVIS ASSEMBLY 1/2 X 5/8” STANDARD	10026B-A	5/8” PIN
	CLEVIS ASSEMBLY 5/8 TH X 5/8 PIN	R801730	SMALL AUTO PIN
AS3000	CLEVIS ASSEMBLY GUNITE AUTO SLACKS	R801732	LARGE AUTO PIN

SPRING BRAKES & BRAKE CHAMBERS

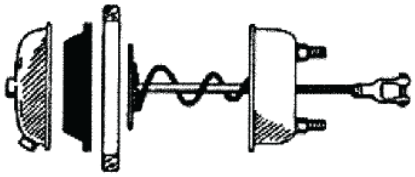

ASSEMBLY	DESCRIPTION
CSB12SCC	AIR CHAMBER – TYPE 12 DI-PRO
CSB16SCC	AIR CHAMBER – TYPE 16 CARLISLE
CSB20SCC	AIR CHAMBER – TYPE 20 DI-PRO
CSB24SCC	AIR CHAMBER – TYPE 24 DI-PRO
CSB30SC	AIR CHAMBER, SERVICE, TYPE 30
CSB36SC	AIR CHAMBER – TYPE 36 CARLISLE

CSB30SCC-3	TYPE 30 3” LONG STROKE SERVICE CHAMBER
CSB3030CC	TYPE 30/30 SPRING BRAKE
CSB3030CC-3	TYPE 30/30 SPRING BRAKE LONG STROKE

WHEELS, RIMS & WHEEL SPACERS

ALCOA ALUMINUM WHEELS 10-HOLE, HUB PILOTED

PART #	DESCRIPTION
873600	22.5 X 7.50 MACHINE FINISH
873601	22.5 X 7.50 POLISHED OUTSIDE
873602	22.5 X 7.50 POLISHED INSIDE
873603	22.5 X 7.50 POLISHED BOTH SIDES
883640	22.5 X 8.25 MACHINE FINISH
883641	22.5 X 8.25 POLISHED OUTSIDE
883642	22.5 X 8.25 POLISHED INSIDE
883643	22.5 X 8.25 POLISHED BOTH SIDES
883677	22.5 X 8.25 LVL ONE
983640	24.5 X 8.25 MACHINE FINISH
983641	24.5 X 8.25 POLISHED OUTSIDE
983642	24.5 X 8.25 POLISHED INSIDE
983643	24.5 X 8.25 POLISHED BOTH SIDES
983677	24.5 X 8.25 LVL ONE

ALCOA ALUMINUM WHEELS 10 HOLE STUD PILOT

PART #	DESCRIPTION
873100	22.5 X 7.50 MACHINE FINISH
873101	22.5 X 7.50 POLISHED OUTSIDE
873102	22.5 X 7.50 POLISHED INSIDE
873103	22.5 X 7.50 POLISHED BOTH SIDES
883110	22.5 X 8.25 MACHINE FINISH
883111	22.5 X 8.25 POLISHED OUTSIDE
883112	22.5 X 8.25 POLISHED INSIDE
883113	22.5 X 8.25 POLISHED BOTH SIDES
983100	24.5 X 8.25 MACHINE FINISH
983101	24.5 X 8.25 POLISHED OUTSIDE
983102	24.5 X 8.25 POLISHED INSIDE
983103	24.5 X 8.25 POLISHED BOTH SIDES

8 HOLE, HUB PILOTED MOUNTING

PART #	DESCRIPTION
873400	22.5 X 7.50 MACHINE FINISH
873401	22.5 X 7.50 POLISHED OUTSIDE
873402	22.5 X 7.50 POLISHED INSIDE
873403	22.5 X 7.50 POLISHED BOTH SIDES
883420	22.5 X 8.25 MACHINE FINISH
883421	22.5 X 8.25 POLISHED OUTSIDE
883422	22.5 X 8.25 POLISHED INSIDE
883423	22.5 X 8.25 POLISHED BOTH SIDES
983400	24.5 X 8.25 MACHINE FINISH
983401	24.5 X 8.25 POLISHED OUTSIDE
983402	24.5 X 8.25 POLISHED INSIDE
983403	24.5 X 8.25 POLISHED BOTH SIDES

STEEL RIMS

PART #	DESCRIPTION
7050225DVSE	22.5 X 7.5
825225DVLE	22.5 X 8.25
82524DVLE	24.5 X 8.25

SPACERS

PART #	DESCRIPTION
SB3015K	15 X 3
SB3315K	15 X 3 3/8
SB3320K	20 X 3 3/8
SB3520K	20 X 3 5/8
SB4020K	20 X 4
SB4020R	20 X 4 HD
SB4220K	20 X 4 1/4
SB4220R	20 X 4 1/4 HD
SB4420K	20 X 4 1/2
SB3322K	22 X 3 3/8
SB4022K	22 X 4
SB4022R	22 X 4 HD
SB4222K	22 X 4 1/4
SB4222R	22 X 4 1/4 HD
SB4422K	22 X 4 1/2
SB4422R	22 X 4 1/2 HD

STEEL WHEELS

PART #	DESCRIPTION
89920E	8 HOLE 22. 5 X 8.25 UNIMOUNT
89851E	8 HOLE 24.5 X 8.25 UNIMOUNT
87893E	10 HOLE 22.5 X 7.50
90631E	10 HOLE 225.X 7.50
87905E	10 HOLE 22.5 X 7.25
90541E	10 HOLE 22.5 C 8.25
87897E	10 HOLE ALCOA 24.5 X 15.5
90542E	10 HOLE 24.5 X 8.25

MISC.

5901	10 HOLE NYLON SEPARATOR-SM
5902	10 HOLE NYLON SEPARATOR-LG
7902	8 HOLE NYLON SEPARATOR

SPRING SUSPENSIONS

BLANK PAGE

HUTCH

H9700 & CH-9700 (OVERSLUNG)

ITEM	PART NO.	DESCRIPTION	QTY	
			S/A	T/A
1	SEE CHART A	FRONT SPRING HANGER	2	2
2	SEE CHART A	CENTER ROCKER/ROCKER HANGER ASSEMBLY	0	2
3	SEE CHART A	REAR SPRING HANGER ASSEMBLY	2	2
4	719-02	RADIUS ROD BOLT – HEX BOLT – 1 – 14 UNS X 5”	4	8
5	16398-04	RADIUS ROD W/ BUSHING – 19.25 LG	1	2
6	10562-00	FLANGE LOCKNUT - 1 – 14 UNS, GRF, PHOSPHATE & OIL	4	8
7	SEE CHART C	U-BOLT – STANDARD 7/8” U-BOLT (SHOWN)	4	8
8	16868-01	TOP PLATE	2	4
9	17350-02	GALVANIZED LINER	2	4
10	SEE SPRING APPENDIX	SPRING ASSEMBLY – STANDARD 3-LEAF (SHOWN)	2	4
11	SEE CHART B	SPRING SEAT – 5” ROUND (SHOWN)	2	4
12	SEE CHART D	BOTTOM PLATE – 5” ROUND (SHOWN)	2	4
13	35-00 OR	WASHER – PL, 15/16 ID X 1 3/4 OD (FOR STANDARD 7’8” U-BOLT SHOWN)	8	16
	817-00	WASHER – 1/8” X 13/16 ID X 1 1/2” OD (FOR OPTIONAL 3/4” U-BOLT)	8	16
14	34-04 OR	HEX NUT – 7/8” – 14 UNF (FOR STD 7/8” U-BOLT SHOWN)	8	16
	16303-01	HEX NUT – 3/4” – 16 UNF (FOR OPTIONAL 3/4” U-BOLT)	8	16
15	715-00	NON-ADJ. RADIUS ROD W/ RUBBER BUSHING	1	2
16	SEE CHART E	SPRING SEAT – REPLACES REAR SPRING SEAT ONLY	0	2
17	SEE CHART E	ATTACH FITTING – REPLACES REAR BOTTOM PLATE ONLY	0	2
18	SEE CHART E	ADJ. RADIUS ROD W/BUSHING – REPLACES 1 ADJ AND 1 NON-ADJ RADIUS ROD ON REAR AXLE ONLY.	0	2
19	7717-01	WASHER BUSHING – REPLACES SIDEPLATE WASHER 10561-00 ON FABRICATED (H) FRONT AND CENTER HANGERS ONLY	2 PER HANGER	
20	722-00	RADIUS ROD BUSHING ONLY – 3” LG	2 PER RAD. ROD	
21	37-03	HEX LOCK NUT – 5/8” – 18 UNF, GRB (SHIPPED LOOSE, NOT PART OF CENTER ROCKER & HANGER ASSY. HOWEVER IT IS PART OF THE REAR HANGER ASSY.)	2 PER ROCKER 1 PER REAR HGR.	
22	756-00	SLEEVE SPACER – 3/4 OD X 18 GA X 3 1/4 LG (SHIPPED LOOSE, NOT PART OF CENTER ROCKER & HANGER ASSY. HOWEVER IT IS PART OF THE REAR HANGER ASSY).	2 PER ROCKER 1 PER REAR HGR.	
23	759-00	HEX BOLT – 5/8” – 18 UNF X 4 1/2 LG, GR2 (SHIPPED LOOSE, NOT PART OF CENTER ROCKER & HANGER ASSY. HOWEVER IS PART OF THE REAR HANGER ASSY).	2 PER ROCKER 1 PER REAR HGR.	
24	11154-00	HEX LOCK NUT – 1 1/8” – 7 UNC, GR 5	1 PER ROCKER	
25	837-00	WASHER – 1/8” X 1 1/4 ID X 2 1/4 OD	2 PER ROCKER	
26	16158-01 OR	FABRICATED ROCKER ASSEMBLY E/ RUBBER BUSHING (SHOWN)	0	2
	17784-01	CAST ROCKER ASSEMBLY E/ RUBBER BUSHING (NOT SHOWN)	0	2
27	18723-01	ROCKER BUSHING ONLY – RUBBER	1 PER ROCKER	
28	16150-01	HEX CAP SCREW – 1 1/8” – 7 UNC X 6.62” LG, GR5	1 PER ROCKER	
29	16353-01	ROCKER REPLACEMENT BOLT KIT CONSISTING OF 1 EA. 16150-01, 2EA. 837-00, 1 EA. 11154-00, 2EA. 759-00, 2EA. 756-00 AND 2 EA. 37-03	1 PER ROCKER	

CHART A – HANGER: FABRICATED (H) AND CAST (CH) HANGERS

DESCRIPTION	PART NO.	STR/MT	UN/MT	UN/MT (I-BEAM)	SI/MT	FL/MT/WO	FL/MT/BO
FRONT HGR. FAB (H)	7701-	-01	20728-01	16481-01	L. 20729-01 R. 20730-01	L-05 R-06	L-07 R-08
FRONT HGR. CAST (CH)		702-01	L. 16291-03 R. 16291-04	N/A	L. 16291-03 R. 16291-04	L. 702-09 R. 702-10	L. 702-11 R. 702-12
ROCKER & HGR ASSY FAB (H)	16319-	-01	-02	-02	-04	-08	-07
ROCKER & HGR ASSY CAST (CH)	16319-	-51	-52	-52	-52	-58	-57
ROCKER HGR ONLY, FAB (H)		16169-01	16171-01	16171-01	16175-01	16179-01	16178-01
ROCKER HGR ONLY, CAST (CH)		16196-03	16197-03	16197-03	16197-03	16199-05	16199-03
REAR HGR ASSY FAB (H)	7703-	-01	20732-01	16483-01	L. 20733-01 R. 20734-01	L-05 R-06	L-07 R-08
REAR HGR ASSY CAST (CH)		712-01	L. 16293-01 R. 16293-02	N/A	L. 16293-01 R. 16293-02	L. 712-09 R. 712-10	L. 712-11 R. 712-12

CHART B – SPRING SEAT

SEAT HEIGHT		3/4”	1 1/4”	1 3/4”	2 1/4”	2 3/4”	3 1/4”	3 3/4”	4 1/4”	4 3/4”
5” ROUND	19360-	-01	-02	-03	-04	-05	-06	-07	-08	-09
5” X 5” SQUARE	19365-	-01	-02	-03	-04	-05	-06	-07	-08	-09
4” X 6” RECTANGLE	19364-	-01	-02	-03	-04	-05	-06	-07	-08	-09

H-9700/CH-9700

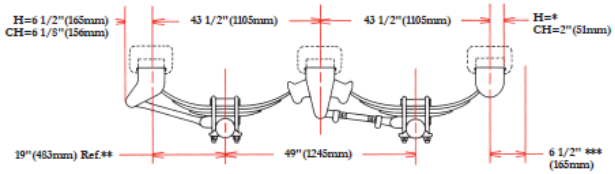

* Str/mt = 3 1/2" (89mm), Un/mt & Si/mt = 3 7/8" (99mm), Fl/mt = 5 1/2" (140mm)
** Ref: This dimension may vary with changes in springs, spring seat heights, etc.
*** Recommended spring clearance

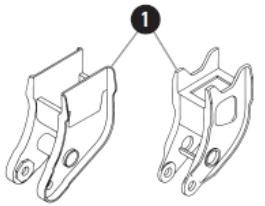

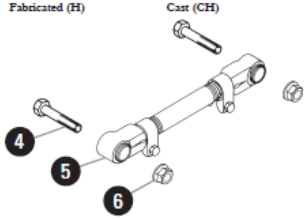

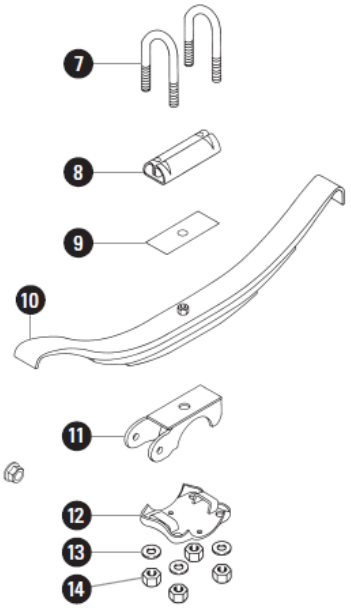

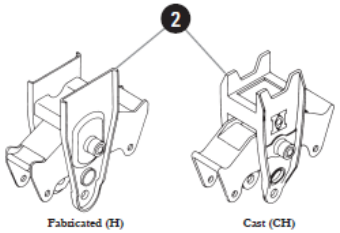

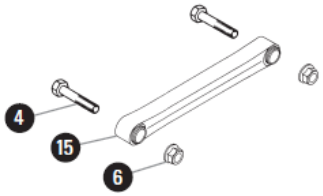

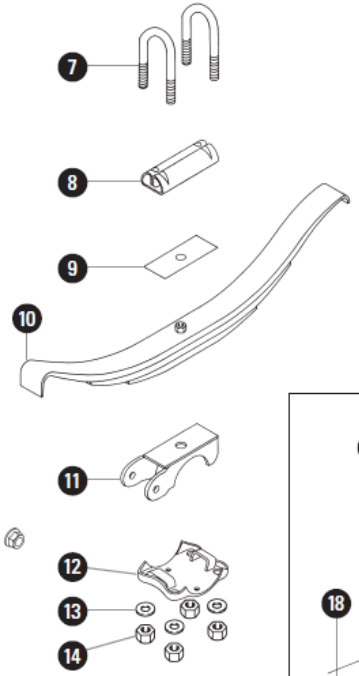

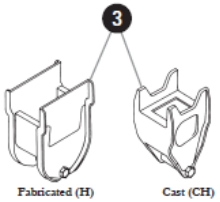

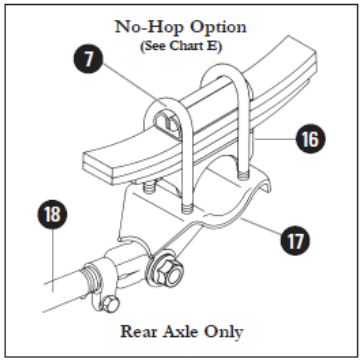

Replacement Parts

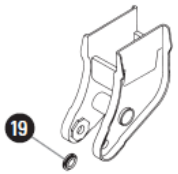

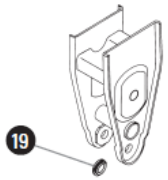

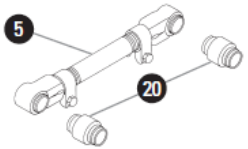

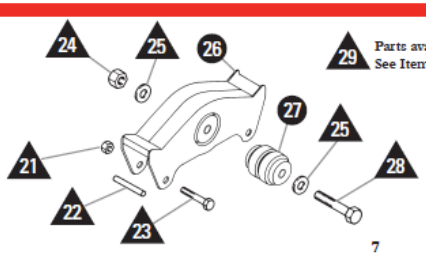

29 Parts available as a kit
See Item 29 Pg. 5

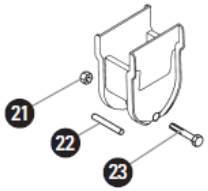

CHART C – U-BOLT

5” ROUND AXLE

U-BOLTS

7040 – SEE BELOW, STD. 7/8 DIA. X 3 RD. X SEE LENGTH BELOW
16300 – SEE BELOW, OPT. 3/4 DIA X 3 RD. X SEE LENGTH BELOW

SEAT HEIGHT	SIGN LEAF SPRING	LENGTH	TWO LEAF SPRING	LENGTH	THREE LEAF SPRING	LENGTH	SEVEN LEAF SPRING	LENGTH	EIGHT LEAF SPRING	LENGTH
3/4	-06	9 3/4	-07	10 1/4	-08	10 3/4	-10	11 3/4	-11	12 1/4
1 1/4	-07	10 1/4	-08	10 3/4	-09	11 1/4	-11	12 1/4	-12	12 3/4
1 3/4	-08	10 3/4	-09	11 1/4	-10	11 3/4	-12	12 3/4	-13	13 1/4
2 1/4	-09	11 1/4	-10	11 3/4	-11	12 1/4	-13	13 1/4	-14	13 3/4
2 3/4	-10	11 3/4	-11	12 1/4	-12	12 3/4	-14	13 3/4	-15	14 1/4
3 1/4	-11	12 1/4	-12	12 3/4	-13	13 1/4	-15	14 1/4	-16	14 3/4
3 3/4	-12	12 3/4	-13	13 1/4	-14	13 3/4	-16	14 3/4	-17	15 1/4
4 1/4	-13	13 1/4	-14	13 3/4	-15	14 1/4	-17	15 1/4	-18	15 3/4
4 3/4	-14	13 3/4	-15	14 1/4	-16	14 3/4	-18	15 3/4	-19	16 1/4

5” X 5” SQUARE AXLE

U-BOLTS

7040 – SEE BELOW, STD 7/8 DIA X 3 RD. X SEE LENGTH BELOW

SEAT HEIGHT	SIGN LEAF SPRING	LENGTH	TWO LEAF SPRING	LENGTH	THREE LEAF SPRING	LENGTH	SEVEN LEAF SPRING	LENGTH	EIGHT LEAF SPRING	LENGTH
3/4	-08	10 3/4	-09	11 1/4	-10	11 3/4	-12	12 3/4	-13	13 1/4
1 1/4	-09	11 1/4	-10	11 3/4	-11	12 1/4	-13	13 1/4	-14	13 3/4
1 3/4	-10	11 3/4	-11	12 1/4	-12	12 3/4	-14	13 3/4	-15	14 1/4
2 1/4	-11	12 1/4	-12	12 3/4	-13	13 1/4	-15	14 1/4	-16	14 3/4
2 3/4	-12	12 3/4	-13	13 1/4	-14	13 3/4	-16	14 3/4	-17	15 1/4
3 1/4	-13	13 1/4	-14	13 3/4	-15	14 1/4	-17	15 1/4	-18	15 3/4
3 3/4	-14	13 3/4	-15	14 1/4	-16	14 3/4	-18	15 3/4	-19	16 1/4
4 1/4	-15	14 1/4	-16	14 3/4	-17	15 1/4	-19	16 1/4	-20	16 3/4
4 3/4	-16	14 3/4	-17	15 1/4	-18	15 3/4	-20	16 3/4	-21	17 1/4

4” X 6” RECTANGLE AXLE

U-BOLTS

7040 – SEE BELOW, STD 7/8 DIA X 3 RD. X SEE LENGTH BELOW

SEAT HEIGHT	SIGN LEAF SPRING	LENGTH	TWO LEAF SPRING	LENGTH	THREE LEAF SPRING	LENGTH	SEVEN LEAF SPRING	LENGTH	EIGHT LEAF SPRING	LENGTH
3/4	-10	11 3/4	-11	12 1/4	-12	12 3/4	-14	13 3/4	-15	14 1/4
1 1/4	-11	12 1/4	-12	12 3/4	-13	13 1/4	-15	14 1/4	-16	14 3/4
1 3/4	-12	12 3/4	-13	13 1/4	-14	13 3/4	-16	14 3/4	-17	15 1/4
2 1/4	-13	13 1/4	-14	13 3/4	-15	14 1/4	-17	15 1/4	-18	15 3/4
2 3/4	-14	13 3/4	-15	14 1/4	-16	14 3/4	-18	15 3/4	-19	16 1/4
3 1/4	-15	14 1/4	-16	14 3/4	-17	15 1/4	-19	16 1/4	-20	16 3/4
3 3/4	-16	14 3/4	-17	15 1/4	-18	15 3/4	-20	16 3/4	-21	17 1/4
4 1/4	-17	15 1/4	-18	15 3/4	-19	16 1/4	-21	17 1/4	-22	17 3/4
4 3/4	-18	15 3/4	-19	16 1/4	-20	16 3/4	-22	17 3/4	-23	18 1/4

CHART D – BOTTOM PLAT

AXLE SIZE	PART NO.	
5” RD. W 7/8” DIA. U-BOLTS	710-00	
5” RD. W 3/4” DIA. U-BOLTS	16297-01	
5” X 5” SQUARE	7747-01	
4’ X 6” RECT.	7746-00	

CHART E – NO-HOP OPTION

5” ROUND AXLE

U-BOLTS

7040 – SEE BELOW, STD. 7/8 DIA. X 3 RD. X SEE LENGTH BELOW
16300 – SEE BELOW, OPT. 3/4 DIA X 3 RD. X SEE LENGTH BELOW

SEAT HEIGHT	SIGN LEAF SPRING	LENGTH	TWO LEAF SPRING	LENGTH	THREE LEAF SPRING	LENGTH	SEVEN LEAF SPRING	LENGTH	EIGHT LEAF SPRING	LENGTH
3/4	-06	9 3/4	-07	10 1/4	-08	10 3/4	-10	11 3/4	-11	12 1/4
1 1/4	-07	10 1/4	-08	10 3/4	-09	11 1/4	-11	12 1/4	-12	12 3/4
1 3/4	-08	10 3/4	-09	11 1/4	-10	11 3/4	-12	12 3/4	-13	13 1/4
2 1/4	-09	11 1/4	-10	11 3/4	-11	12 1/4	-13	13 1/4	-14	13 3/4

AXLE GROUP

SEAT HEIGHT	RADIUS ROD	ATTACH FITTINGS		SEAT
		W/ STD. 7/8 DIA. U-BOLTS	W/OPT 3/4 DIA. U-BOLTS	
3/4	16398-06	10775-00	163084-01	22215-01
1 1/4	16398-06	10775-00	163084-01	22215-02
1 3/4	16398-06	10775-00	163084-01	22215-03
2 1/4	16398-06	10775-00	163084-01	22215-04

5” X 5” SQUARE AXLE

U-BOLTS

7040 – SEE BELOW, STD. 7/8 DIA. X 3 RD. X SEE LENGTH BELOW
16300 – SEE BELOW, OPT. 3/4 DIA X 3 RD. X SEE LENGTH BELOW

SEAT HEIGHT	SIGN LEAF SPRING	LENGTH	TWO LEAF SPRING	LENGTH	THREE LEAF SPRING	LENGTH	SEVEN LEAF SPRING	LENGTH	EIGHT LEAF SPRING	LENGTH
3/4	-08	10 3/4	-09	11 1/4	-10	11 3/4	-12	12 3/4	-13	13 1/4
1 1/4	-09	11 1/4	-10	11 3/4	-11	12 1/4	-13	13 1/4	-14	13 3/4
1 3/4	-10	11 3/4	-11	12 1/4	-12	12 3/4	-14	13 3/4	-15	14 1/4
2 1/4	-11	12 1/4	-12	12 3/4	-13	13 1/4	-15	14 1/4	-16	14 3/4

AXLE GROUP

SEAT HEIGHT	RADIUS ROD	ATTACH FITTINGS	SEAT
3/4	1639804	7738-01	2226-01
1 1/4	1639804	7738-01	2226-01
1 3/4	1639804	7738-01	2226-01
2 1/4	1639804	7738-01	2226-01

TRUCK EQUIPMENT

250-492-0408 Ext 1
1-866-657-2662 Ext 1

parts@peerless.ca
www.peerless.ca

PEERLESS LOGGER CABGUARD

PEERLESS CABGUARDS HAVE BEEN DESIGNED AND TESTED IN ACCORDANCE WITH WORKSAFEBC FORESTRY OPERATIONS REGULATION SECTION 26.65 AND BRITISH COLUMBIA MOTOR VEHICLE REGULATIONS (BC MVR) SECTION 35.07.

CABGUARD PART NUMBER FOLLOWED BY A FOUR DIGIT NUMBER	
FIRST DIGIT	0 – TUBE MOUNTED
	1 – ANGLE MOUNT (SUPPLY LOOSE)
	2 – TUBE MOUNTED (WELDED) WATERTANK
SECOND DIGIT	0 – NO CHECKER PLATE INSTALLED
	1 – ALUMINUM CHECKER PLATE
	2 – STEEL EXPANDED METAL
	3 – ALUMINUM CHECKER PLATE – 6 OVAL LIGHTS
	4 – ALUMINUM CHECKER PLATE – 6 CIRCLE LIGHTS
	5 – STAINLESS STEEL PLATE
	6 – STAINLESS STEEL PLATE – 6 OVAL LIGHTS
	7 – STAINLESS STEEL PLATE – 6 CIRCLE LIGHTS
	8 – ALUMINUM CHECKER PLATE – 6 CIRCLE LIGHTS – DOUBLE LIGHT BOXES
THIRD DIGIT	0 – NO ELECTRICAL SUPPLIED
	1 – WIRED FOR BC
	2 – WIRED FOR AB
	3 – WIRED FOR BC HD CABGUARD
FOURTH DIGIT	0 – NO PAINT
	1 - PAINTED

92138-0000 STANDARD LOGGER

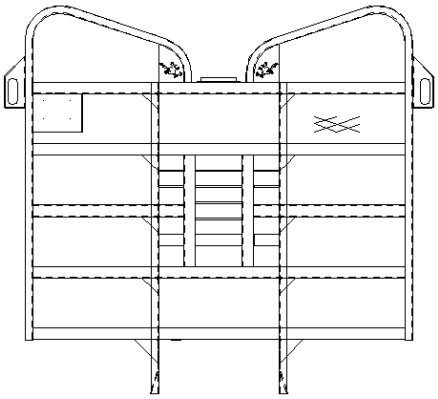

CAPACITY: 53,00KG

92138-0100 ALUMINUM CHECKERPLATE

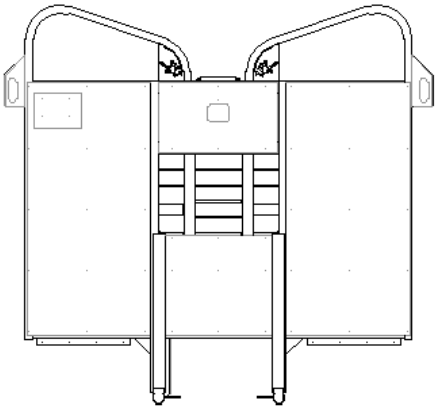

CAPACITY: 53,00KG

92138-0200 EXPANDED METAL

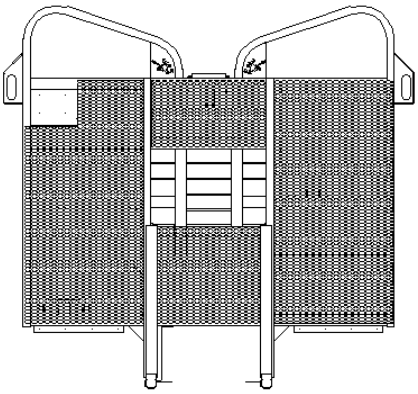

CAPACITY: 53,00KG

92138-0300 ALUMINUM CHK, OVAL LIGHTS

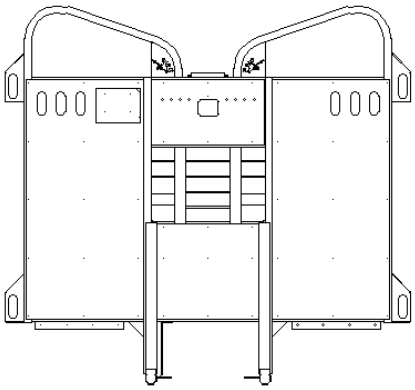

92138-0400 ALUMINUM CHK, CIRCLE LHTS

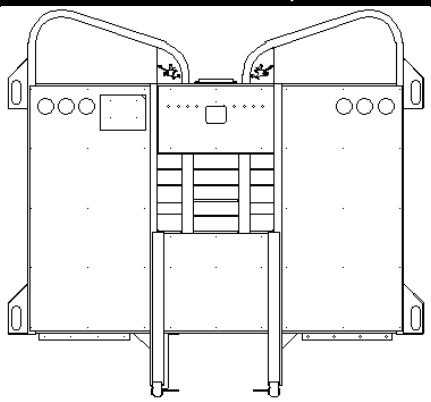

92138-0500 STAINLESS STEEL CABGUARD

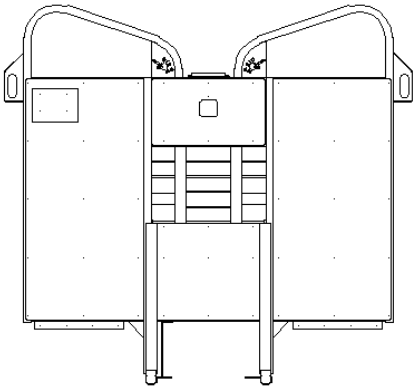

92138-0600 STAINLESS STEEL, OVAL LHTS	92138K-0000 KENWORTH LOGGER	92138K-0100 KENWORTH CHECKERPLATE
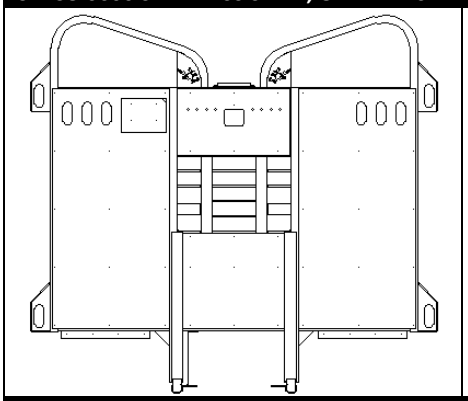	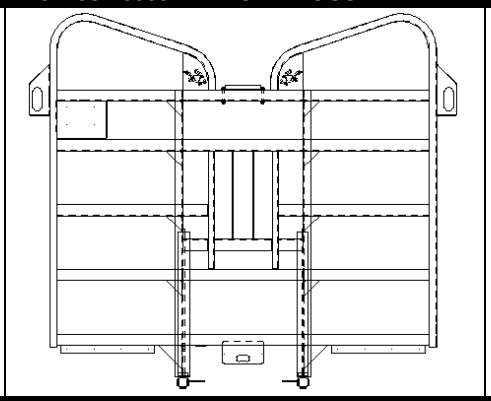	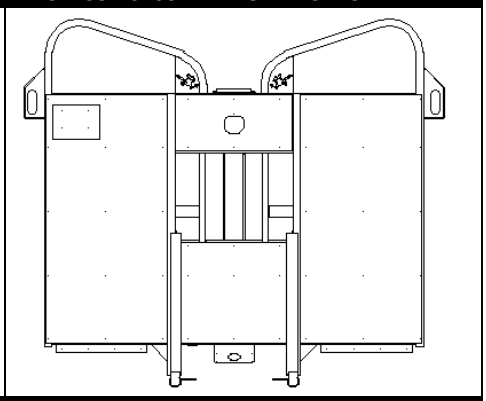
92138Q-0000 QUAD LOGGER	**92138Q-0100 QUAD LOGGER CHECKERPLATE**	**92138Q-0200 QUAD EXPANDED METAL**
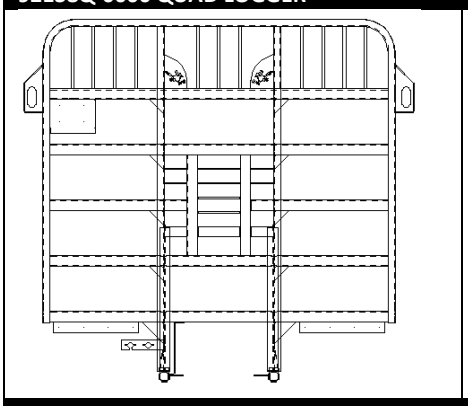	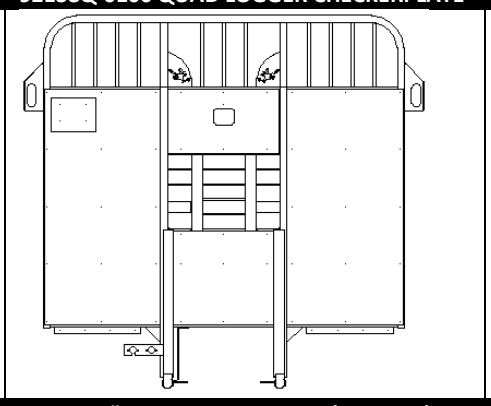	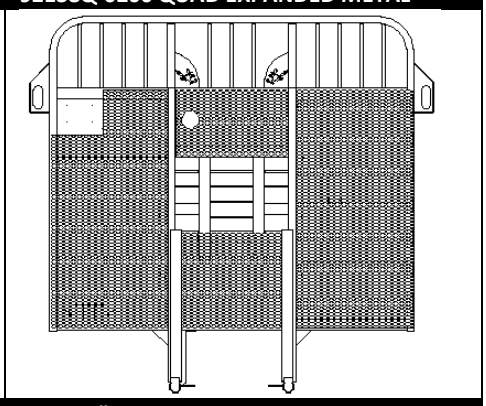
119596 LOWBED TOPLESS CABGUARD	**115713 3" PIPE HD CABGUARD (WEYHSR)**	**83050 3" PIPE HD CABGUARD**
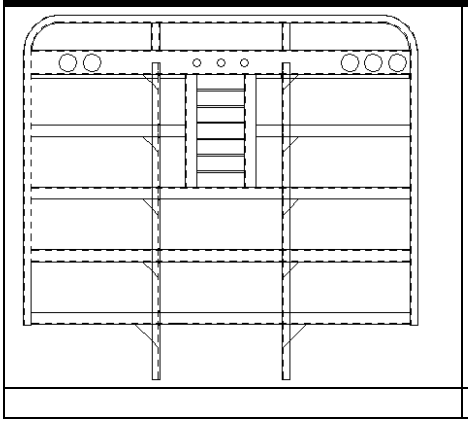	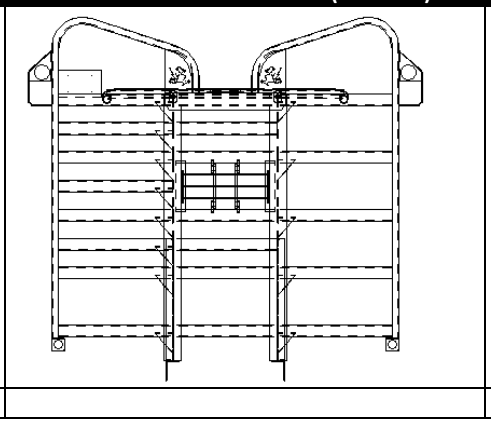	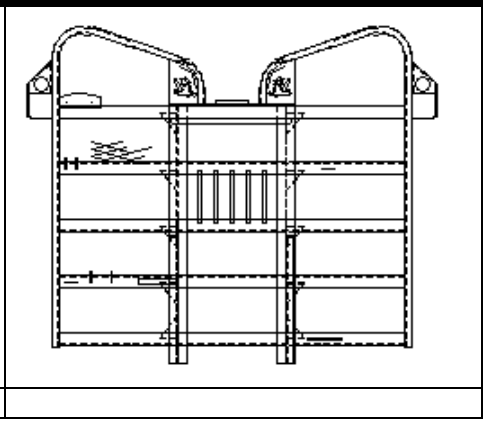

WE DO CUSTOM CABGUARDS – CALL OUR PARTS DEPARTMENT FOR PRICING

CABGUARD HARDWARE

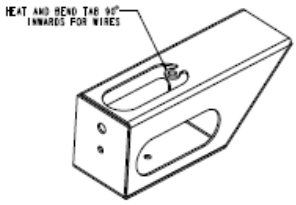

PART #	DESCRIPTION	PART #	DESCRIPTION	PART #	DESCRIPTION
98592	REACH PAD	107094	LITE BOX	102337	FRAME STIFFENER

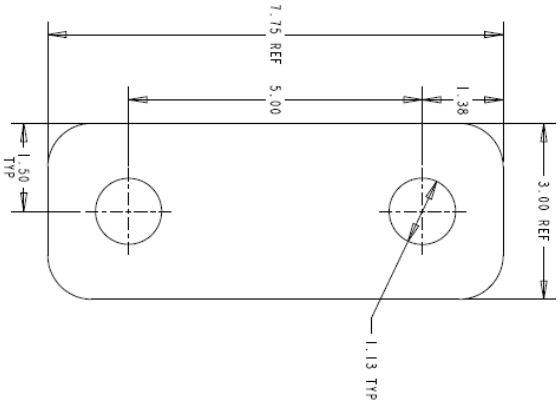

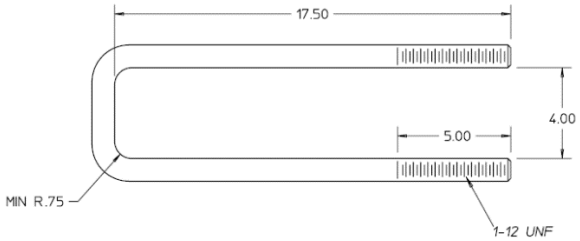

PART #	DESCRIPTION	PART #	DESCRIPTION
		99988	U-BOLT 1” X 4” X 18” SQUARE

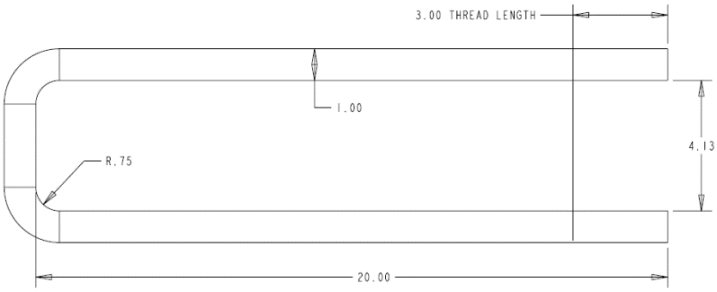

PART #	DESCRIPTION
118320	U-BOLT 1” X 4” X 20” SQ TOP

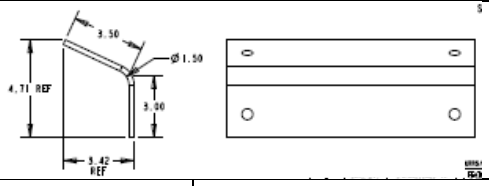

PART #	DESCRIPTION	PART #	DESCRIPTION
104095	TIE BOLT 1” X 20”	90198	TRI-AXLE REACH REST
PART #	DESCRIPTION	PART #	DESCRIPTION
51583	CABGUARD HARNESS, LH		
51584	CABGUARD HARNESS, RH	31-20623	CRADLE REACH PAD

TRUCK EQUIPMENT

SAFETY CHAINS

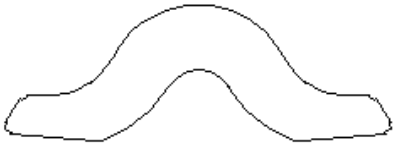
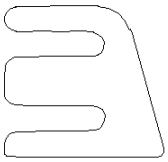
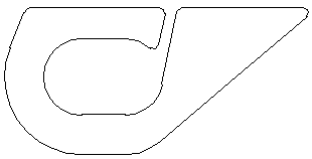

PART #	DESCRIPTION	PART #	DESCRIPTION	PART #	DESCRIPTION
95091	CHAIN ANCHORS	87854	REMOTE HANGER	87853	REACH EYE

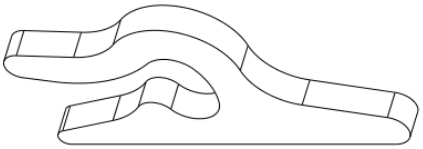
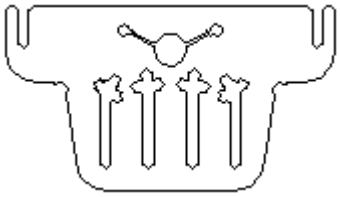

PART #	DESCRIPTION	PART #	DESCRIPTION	PART #	DESCRIPTION
87956	TOGGLE, DRAWBAR CHAIN	88113	SAFETY CHAIN ASSEMBLY	88666	SPIDER MOUNT 580/270
		88114	SAFETY CHAIN ASSEMBLY		

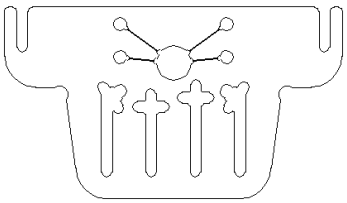

PART #	DESCRIPTION	PART #	DESCRIPTION		
100644	SPIDER MOUNT 370 HITCHES	87956	TOGGLE		

TIRE CHAIN HANGERS

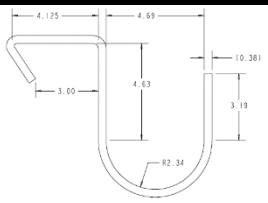
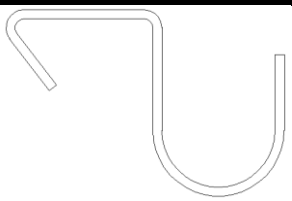
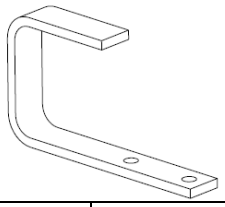

PART #	DESCRIPTION	PART #	DESCRIPTION	PART #	DESCRIPTION
84683	CHAIN HOOK, TRUCK	113728	SW TRAILER	94218	WRAPPER HANGER

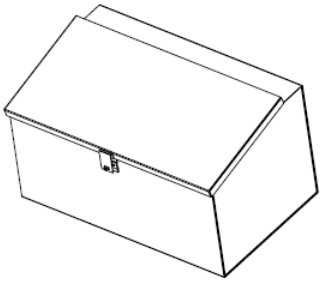
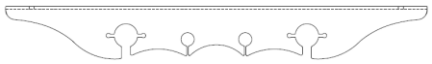
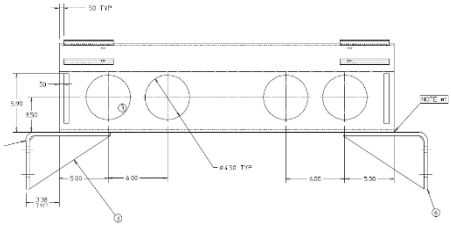

PART #	DESCRIPTION	PART #	DESCRIPTION	PART #	DESCRIPTION
60036	16X18X18 LOGGER TOOL BOX	97741	AIR/ELECTRICAL ANGLE	94613	REAR X MEMBER (JEEP)

DROP HITCH

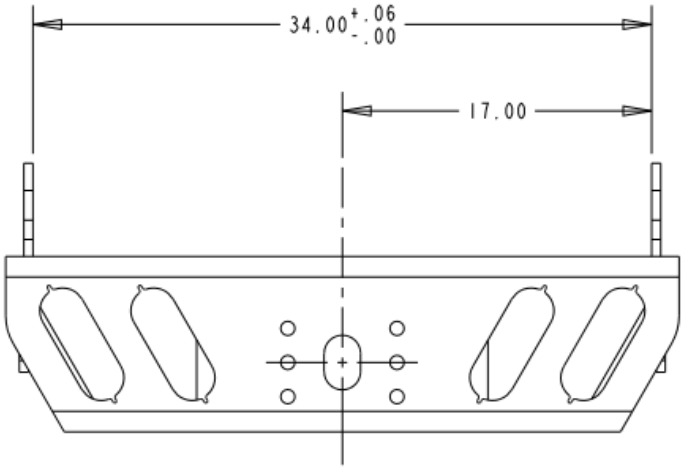

PART #	DESCRIPTION
164460	ASSY, DROP HITCH, KENWORTH
164463	ASSY, DROP HITCH, INTERNATIONAL
164464	ASSY, DROP HITCH, PETERBILT
166508	ASSY, DROP HITCH, WESTERN STAR
167660	ASSY, DROP HITCH, FRIEGHTLINER

UNDER BODY TOOL BOX

PART #	DESCRIPTION
TB181824B	18X18X24
TB181830B	18X18X30
TB181836B	18X18X36
TB181848B	18X18X48
TB181860B	18X18X60
1703305	14X16X36

UNDER BODY TOOL BOXES AVAILABLE IN BLACK OR SILVER

JOCKEY BOXES

PART #	DESCRIPTION
83001	24” X 34”
83001-48	34” X 48”
60023	34” X 68”

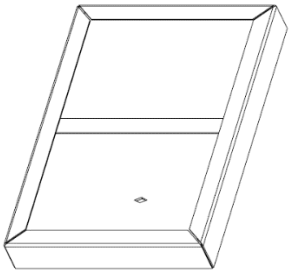

FRAME STEP

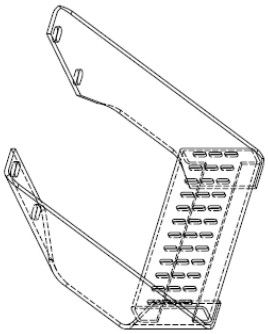

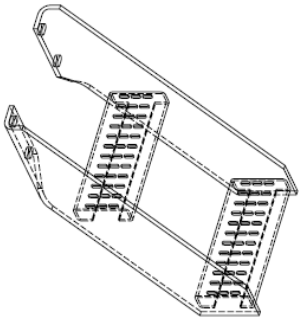

PART #	DESCRIPTION	PART #	DESCRIPTION
81090	FRAME STEP	94307	DOUBLE FRAME STEP

PEERLESS SLIDER ASSEMBLY

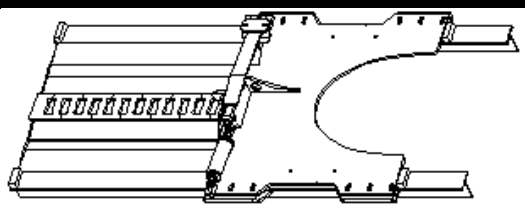

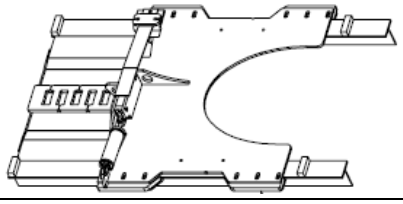

PART #	DESCRIPTION	PART #	DESCRIPTION
122595	5TH WHEEL SLIDER (42”)	90307	5TH WHEEL SLIDER (24”)

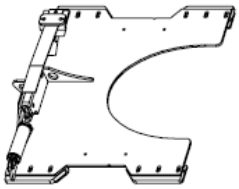

PART #	DESCRIPTION	PART #	DESCRIPTION	PART #	DESCRIPTION
107113	TOP PLATE ASSEMBLY	95994	T-RAIL 91.56 LONG (INC IN ASSY)	107114	EAR PAD 1/2 X 5 X 32

PEERLESS SLIDER ASSEMBLY

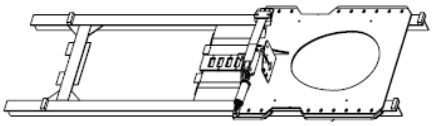

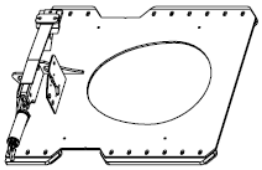

PART #	DESCRIPTION	PART #	DESCRIPTION	PART #	DESCRIPTION
101343	BUNK SLIDER ASSEMBLY	107122	TOP PLATE ASSEMBLY	101348	T-RAIL 135.5” LONG

PEERLESS QUICK CHANGE SLIDER RAIL MOUNT

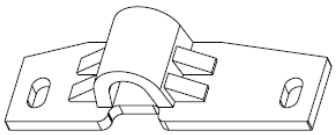

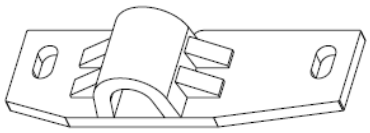

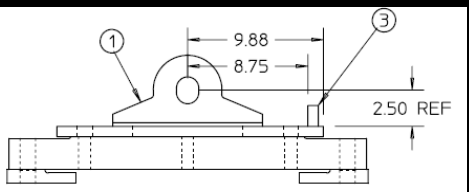

PART #	DESCRIPTION	PART #	DESCRIPTION	PART #	DESCRIPTION
84223L	SCALE MOUNTING PEDESTAL, LH	84223R	SCALE MOUNTING PEDESTAL, RH	108959	SCALE MOUNTING PEDESTAL

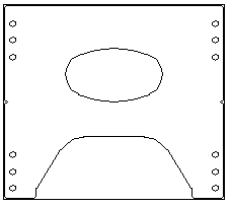

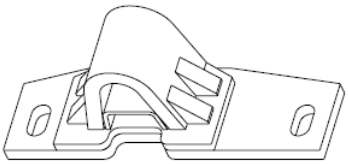

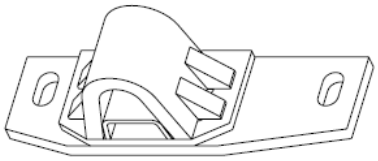

PART #	DESCRIPTION	PART #	DESCRIPTION	PART #	DESCRIPTION
98475	SCALE MOUNTING PLATE	114338	SCALE MOUNTING PEDESTAL 4” LH	114284	SCALE MOUNTING PEDESTAL 4” RH

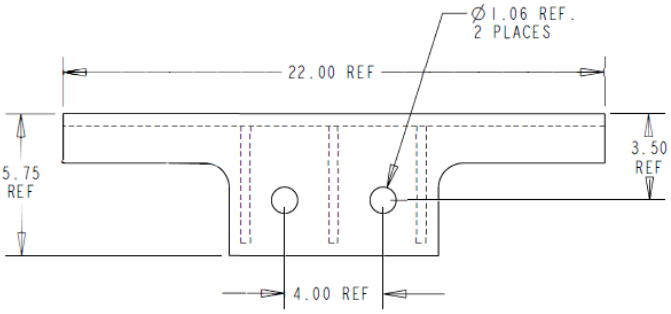

PART #	DESCRIPTION
118217	KIWI SCALE MOUNT

T-RAILS

PART #	DESCRIPTION
217X48	T-RAIL 48”
217X60	T-RAIL 60”
217X72	T-RAIL 72”
106309	T-RAIL 60” @ 6” WEBER
01082	BOLT 1 X 3 NF GRD 8

MISC.

MISC.

RAMP ROLLER

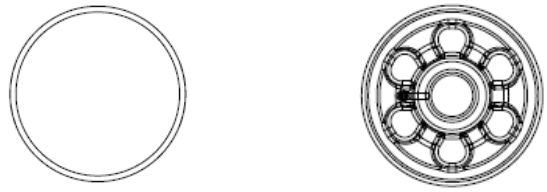

PART #	
97023	PIN
86524	ROLLER

LOWBED TRUCK RAMP KIT

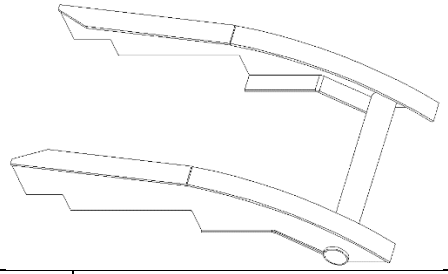

PART #	
86522	RAMP KIT

DROP IN KING PIN

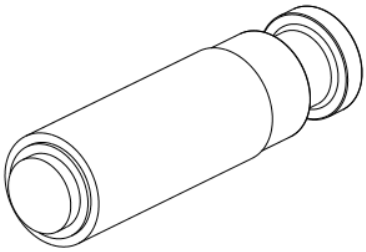

PART #	DESCRIPTION
84338	KING PIN ASSY, 2” REMOVABLE 11”
84339	KING PIN ASSY, 2” REMOVABLE
00-10224	KING PIN, REMOVABLE, SCONA

KING PIN SLEEVE

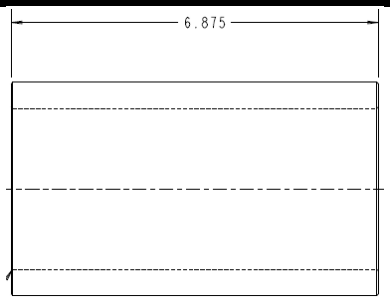

PART #	DESCRIPTION
84341	KING PIN SLEEVE
87341S	KING PIN SLEEVE, SHORT

LUBE LINER

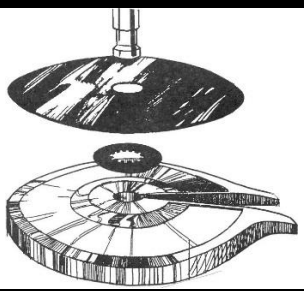

PART #	DESCRIPTION
ZPE501	LUBE LINER
ZPE500	LUBE LINER LOCK RING

FIFTH WHEEL LINER

PART #	DESCRIPTION
ZPE505-LUB	FIFTH WHEEL LINER
104513	GUARD
104514	GUARD
5/16 X 1 1/2 EB	BOLTS

BUTT-N-TOP MOLLY

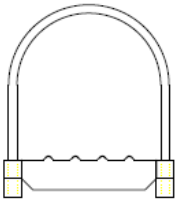

PART #	DESCRIPTION
104667	BUTT-N-TOP MOLLY

TURNTABLES

PART #	DESCRIPTION
DK90/12	TRI-AXLE 39" DOUBLE BALL RACE
DK90-16	QUAD 43” DOUBLE BALL RACE

PREMIER ADJUSTABLE HINGE ASSEMBLIES

320

PART #	
352	TAPERED PIN ASSY.
344	RUBBER BUSHED TAPERED
344A	POLY BUSHING 3.5 X 3.5
350	HINGE BRACKET ASSY.
354	HOUSING, 3” SQUARE TUBING
359	COMPRESSION FLANGE

330

PART #	
352	TAPERED PIN ASSY.
344	RUBBER BUSHING TAPERED
344A	POLY BUSHING 3.5 X 3.5
350	HINGE BRACKET ASSY.
354	HOUSING, 3” SQUARE TUBING
359	COMPRESSION FLANGE

440

PART #	
445	COMPRESSION SHOE
653	LOCK RING
442	HINGE PIN
448	RUBBER BUSHING
448A	POLY BUSHING
441	HINGE BRACKET
424L/R	HINGE PIN HOUSING

PREMIER DRAWBAR EYES

207

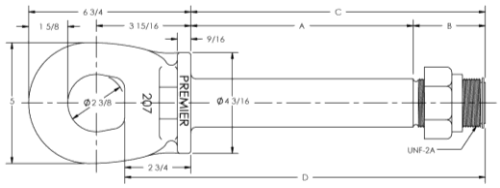

307

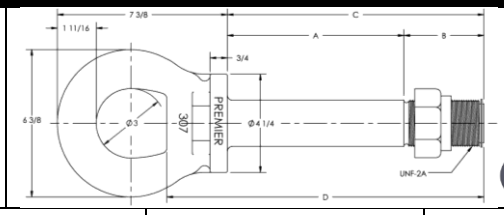

PART #	‘C’ DIMENSION	CAPACITY	WEIGHT	EYE ID
207L	12 1/4”	90,000LBS TENSILE	25.3LBS	2.375”
207S	11 1/8”	90,000LBS TENSILE	24.2LBS	2.375”
207SE	13 1/8”	90,000LBS TENSILE	26.1LBS	2.375”
307L	12 1/4”	150,000LBS TENSILE	29LBS	3”
307S	11 1/8”	150,000LBS TENSILE	28LBS	3”
307SE	13 1/8”	150,000LBS TENSILE	30LBS	3”

FRONT END ASSEMBLIES

87655 PEERLESS

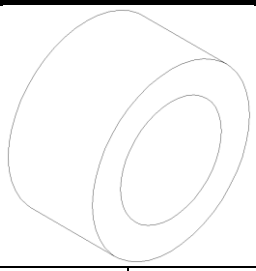

PART #	‘C’ DIMENSION
87655	HOUSING
207SE	POLY BUSHING
307L	WASHER

P205H

CAPACITY	WEIGHT
P250H	HOUSING
P205	POLY BUSHING
349E	WASHER

340S

EYE ID	
346	HOUSING
348A	POLY BUSHING
349	WASHER

PREMIER COUPLINGS

MODEL: 2200/2200L

MAXIMUM GROSS TRAILER WEIGHT:	100,000LBS	45,359KG
MAXIMUM TONGUE WEIGHT:	20,000LBS	9,071KG
ULTIMATE LATCH CAPACITY:	60,000LBS	27,215KG
MAXIMUM EYE X-SECTION:	1 13/16”	46MM
MINIMUM EYE OPENING:	2 3/8”	60MM
UNIT WEIGHT:	29LBS	13.2KG

COUPLING ONLY:
2200 & 271 THIMBLE
2200L: 2200 WITH 2075K LOW PROFILE LEVERKIT INSTALLED
STANDARD INSTALLATION KIT:
2200A: 2200 COUPLING, 501 BOLT KIT, 281 AIR CHAMBER, 267 AIR CHAMBER, ADAPTER BRACKET, 271 THIMBLE

STANDARD INSTALLATION DRAWING

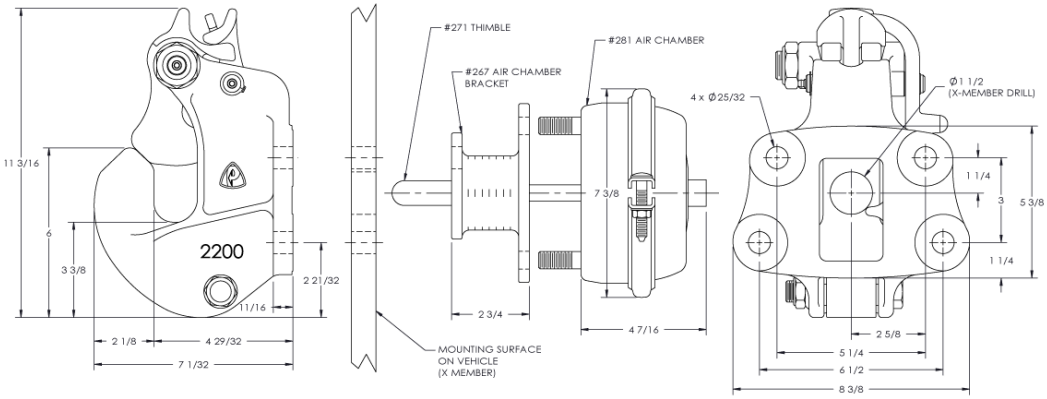

PUSHROD LENGTH IS 3 5/8 in.(92mm) PLUS THICKNESS OF MOUNTING STRUCTURE (X-MEMBER) FOR STANDARD INSTALLATIONS.

MODEL 2200 PARTS AVAILABLE

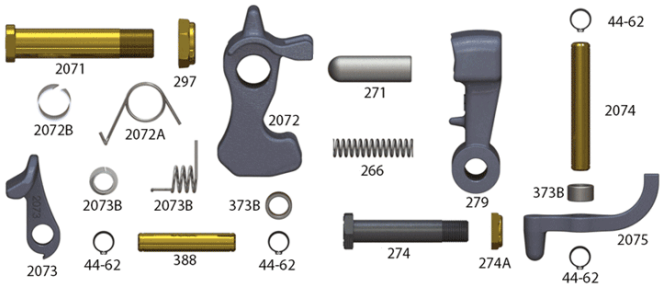

PART #	DESC.	PART #	DESC.	PART #	DESC.
44-62	SNAP RING	2072B	BUSHING	274A	LOCKNUT
297	LOCK NUT	2073	LATCH LOCK	279	SHOE
373B	SPACER	2073A	SPRING	2075	LEVER
388	PIN	2073B	BUSHING	2074	PIN
2071	BOLT	266	SPRING	373B	SPACER
2072	LATCH	271	THIMBLE		
2072A	SPRING	274	BOLT		

2000PK PARTS KIT INCLUDES

PART #	DESC.
44-62	SNAP RING
297	LOCK NUT
373B	SPACER
388	PIN
2071	BOLT
2072	LATCH
2072A	SPRING
2072B	BUSHING
2073	LATCH LOCK
2073A	SPRING
2073B	BUSHING

2000PK-EL PARTS KIT INCLUDES

PART #	DESC.
44-62	SNAP RING
297	LOCK NUT
373B	SPACER
388EL	PIN
2071EL	BOLT
2072EL	LATCH
2072A	SPRING
2072B	BUSHING
2073EL	LATCH LOCK

2200PK-ELL PARTS KIT INCLUDES

PART #	DESC.
44-62	SNAP RING
297	LOCK NUT
373B	SPACER
2071EL	BOLT
2072EL	LATCH
2072A	SPRING
2073A	SPRING
2073EL	LATCH LOCK
2074EL	PIN
2075	HANDLE

MODEL: 270

MAXIMUM GROSS TRAILER WEIGHT:	90,000LBS	40,823KG
MAXIMUM TONGUE WEIGHT:	18,000LBS	8,164KG
ULTIMATE LATCH CAPACITY:	12,000LBS	5,443KG
MAXIMUM EYE X-SECTION:	1 13/16”	46MM
MINIMUM EYE OPENING:	2 3/8”	60MM
UNIT WEIGHT:	26.3LBS	11.9KG

COUPLING ONLY:
270 & 271 THIMBLE
STANDARD INSTALLATION KIT:
270A: 270 COUPLING, 501 BOLT KIT, 281 AIR CHAMBER, 267 AIR CHAMBER, ADAPTER BRACKET, 271 THIMBLE.

STANDARD INSTALLATION DRAWING

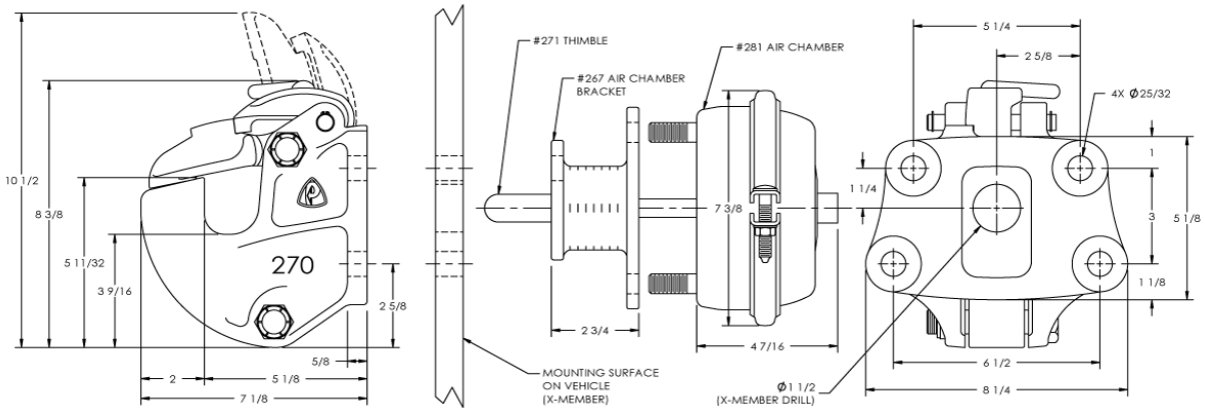

270PK PARTS KIT INCLUDES

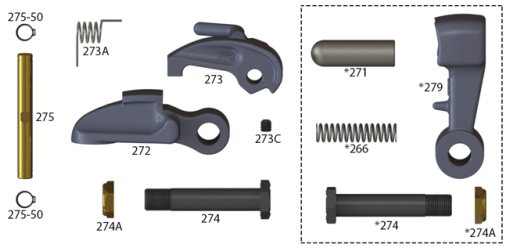

PART #	DESC.	PART #	DESC.	PART #	DESC.
272	Latch	275	Pin	*279	Show
273	Pawl	275-50	Snap Ring		
273A	Spring	*266	Spring		
273C	Set Screw	*271	Thimble		
274	Bolt	*274	Bolt		
274A	Locknut	*27A	Locknut		
*NOT INCLUDED IN PARTS KIT, AVAILABLE INDIVIDUALLY					

MODEL: 370

MAXIMUM GROSS TRAILER WEIGHT:	90,000LBS	40,823KG
MAXIMUM TONGUE WEIGHT:	18,000LBS	8,164KG
ULTIMATE LATCH CAPACITY:	20,000LBS	9,071KG
MAXIMUM EYE X-SECTION:	1 13/16”	46MM
MINIMUM EYE OPENING:	2 3/8”	60MM
UNIT WEIGHT:	30LBS	13.6KG

COUPLING ONLY:
370 & 271 Thimble
STANDARD INSTALLATION KIT:
370A: 370Coupling, 502 Bolt Kit, 281 Air Chamber, 467 Air Chamber, Adapter Bracket, 271 Thimble

STANDARD INSTALLATION DRAWING

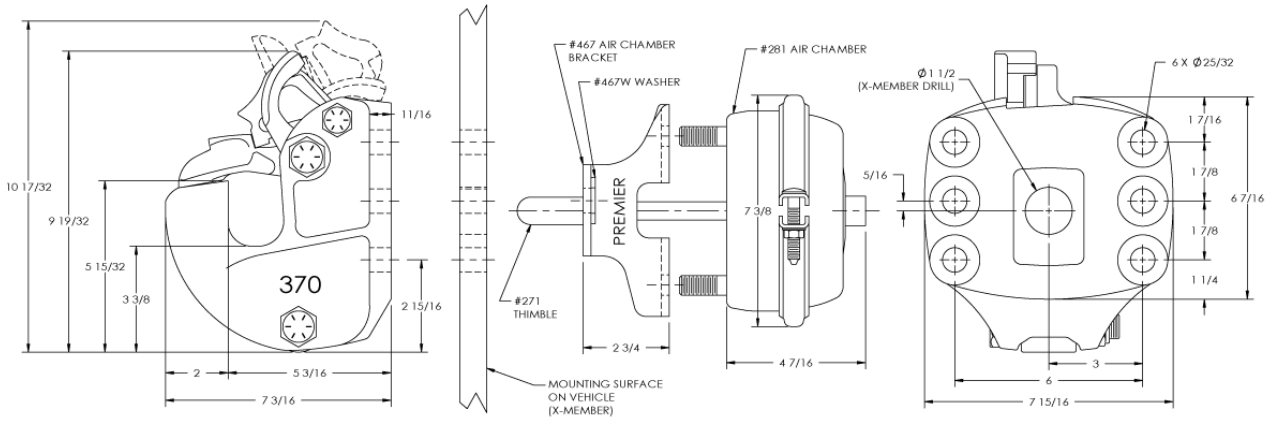

370PK PARTS KIT INCLUDES:

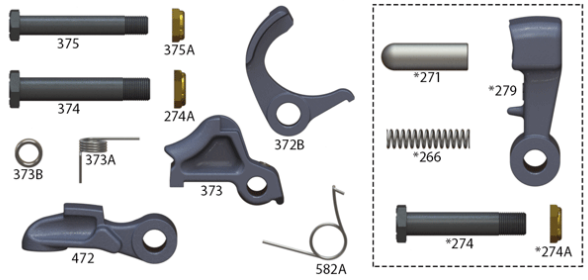

PART #	DESC.	PART #	DESC.	PART #	DESC.
274A	LOCKNUT	375	BOLT	*274	BOLT
372B	LOCKING PAWL	375A	LOCKNUT	*274A	LOCKNUT
373	PAWL	472	LATCH	*279	SHOE
373A	SPRING	582A	SPRING		
373B	SPACER	*266	SPRING		
374	BOLT	*271	THIMBLE		

*NOT INCLUDED IN PARTS KIT, AVAILABLE INDIVIDUALLY

MODEL: 570

MAXIMUM GROSS TRAILER WEIGHT:	90,000LBS	40,823KG
MAXIMUM TONGUE WEIGHT:	18,000LBS	8,164KG
ULTIMATE LATCH CAPACITY:	20,000LBS	9,071KG
MAXIMUM EYE X-SECTION:	1 13/16”	46MM
MINIMUM EYE OPENING:	2 3/8”	60MM
UNIT WEIGHT:	32.8LBS	14.9KG

COUPLING ONLY:
570 & 271 THIMBLE
STANDARD INSTALLATION KIT:
570A: 570 COUPLING, 504 BOLT KIT, 281C AIR CHAMBER, 271 THIMBLE.

STANDARD INSTALLATION DRAWING

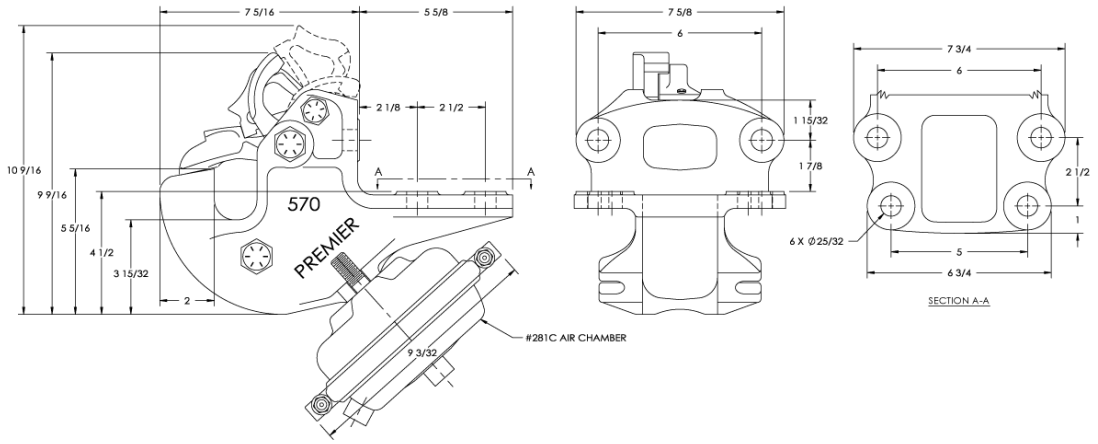

PUSHROD LENGTH IS 2 3/8 in.(60mm) FOR STANDARD BOTTOM MOUNT AIR CAN INSTALLATIONS.

MODEL PARTS AVAILABLE

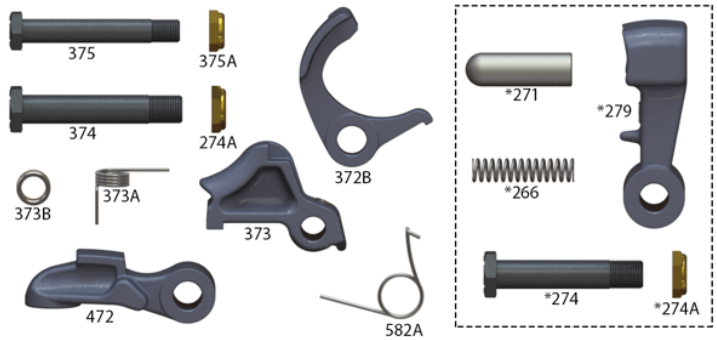

*NOT INCLUDED IN PARTS KIT, AVAILABLE INDIVIDUALLY

PART #	DESC.	PART #	DESC.
274A	LOCKNUT	*274	BOLT
372B	LOCKING PAWL	*274A	LOCKNUT
373	PAWL	*279	SHOE
373A	SPRING		
373B	SPACER		
374	BOLT		
375	BOLT		
375A	LOCKNUT		
472	LATCH		
582A	SPRING		
*266	SPRING		
*271	THIMBLE		

MODEL: 580

MAXIMUM GROSS TRAILER WEIGHT:	70,000LBS	31,751KG
MAXIMUM TONGUE WEIGHT:	14,000LBS	6,350KG
ULTIMATE LATCH CAPACITY:	30,000LBS	13,607KG
MAXIMUM EYE X-SECTION:	1 13/16”	46MM
MINIMUM EYE OPENING:	2”	51MM
UNIT WEIGHT:	21.3LBS	9.65KG

COUPLING ONLY:
580

STANDARD INSTALLATION DRAWING

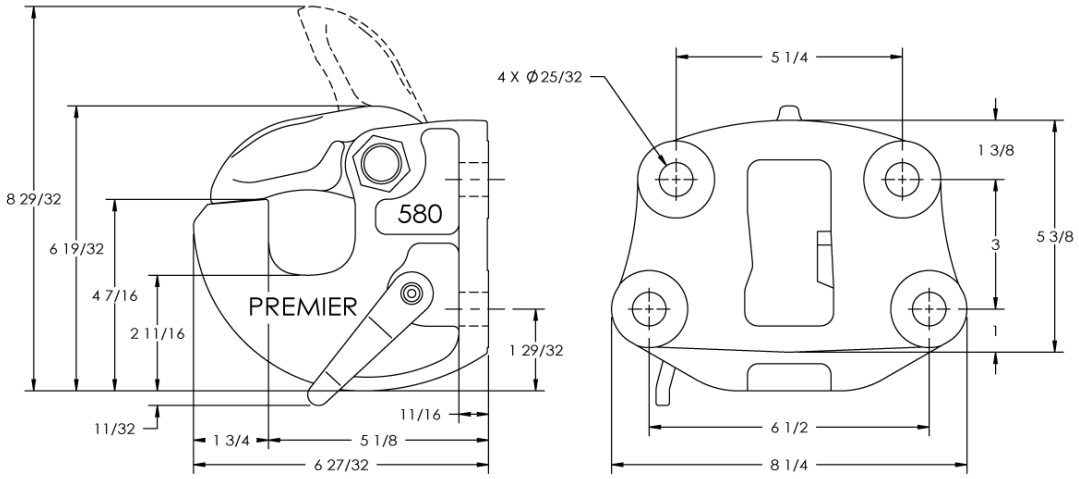

MODEL PARTS AVAILABLE

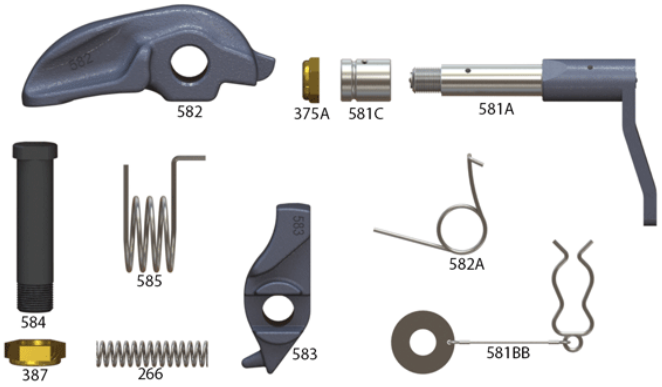

PART #	DESC.
266	SPRING
375A	LOCKNUT
387	LOCKNUT
581A	HANDLE
581BB	CLIP & CABLE
581C	BUSHING
582	LATCH
582A	SPRING
583	PAWL
584	BOLT
585	SPRING
*581	HANDLE ASSEMBLY

MODEL: 2300

MAXIMUM GROSS TRAILER WEIGHT:	100,000LBS	46,359KG
MAXIMUM TONGUE WEIGHT:	20,000LBS	9,071KG
ULTIMATE LATCH CAPACITY:	60,000LBS	27,215KG
MAXIMUM EYE X-SECTION:	1 13/16”	46MM
MINIMUM EYE OPENING:	2 3/8”	60MM
UNIT WEIGHT:	30.3LBS	13.7KG

COUPLING ONLY:
2300 & 271 THIMBLE
2300EL: 2300 WITH EXTENDED LIFE LATCH DIRECT-INJECT LATCH LUBRICATION PORTS.
STANDARD INSTALLATION KIT:
2300A: 2300 COUPLING, 502 BOLT KIT, 281 AIR CHAMBER, 467 AIR CHAMBER, CHAMBER ADPATER BRACKET, 271 THIMBLE
2300ELA: 2300EL COUPLING, 502 BOLT KIT, 281 AIR CHAMBER, 467 AIR CHAMBER ADAPTER BRACKET, 271 THIMBLE

STANDARD INSTALLATION DRAWING

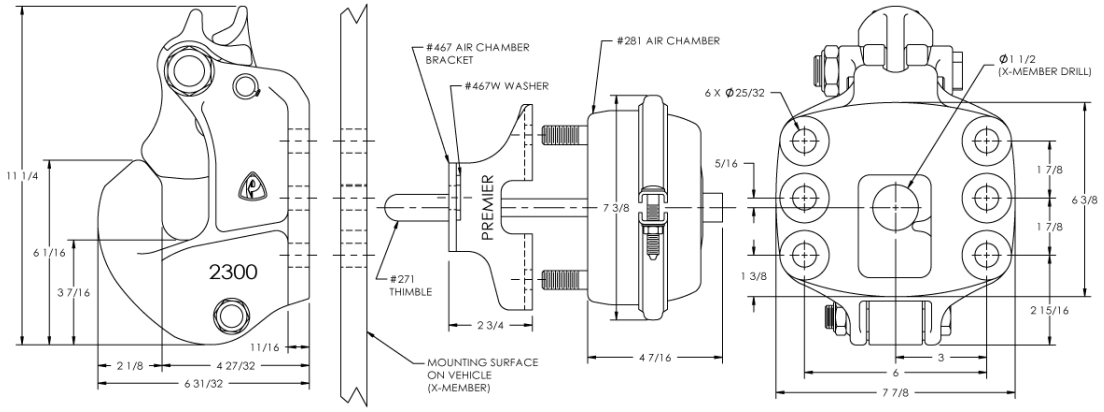

PUSHROD LENGTH IS 3 5/8 in. (92mm) PLUS THICKNESS OF MOUNTING STRUCTURE (X-MEMBER) FOR STANDARD INSTALLATIONS.

MODEL 2300 PARTS AVAILABLE

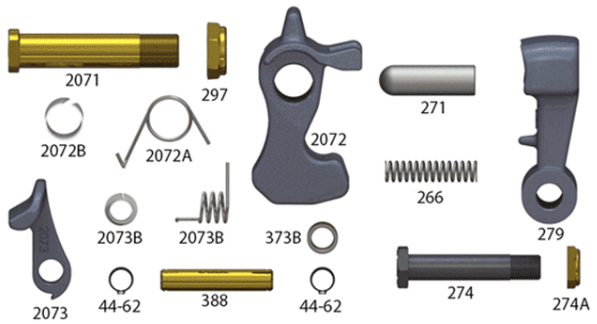

PART #	DESC.	PART #	DESC.	PART #	DESC.
44-62	SNAP RING	2072A	SPRING	271	THIMBLE
297	LOCKNUT	2072B	BUSHING	274	BOLT
373B	SPACER	2073	LATCH LOCK	274A	LOCKNUT
388	PIN	2073A	SPRING	279	SHOE
2071	BOLT	2073B	BUSHING		
2072	LATCH	266	SPRING		

2000PK PARTS KIT INCLUDES

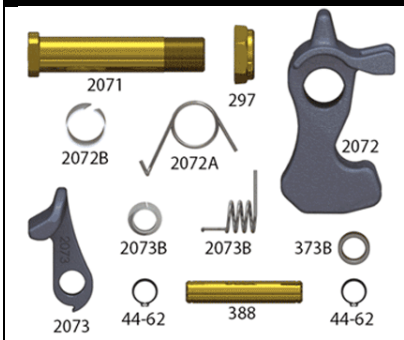

PART #	DESC.
44-62	SNAP RING
297	LOCK NUT
373B	SPACER
388	PIN
2071	BOLT
2072	LATCH
2072A	SPRING
2072B	BUSHING
2073	LATCH LOCK
2073A	SPRING
2073B	BUSHING

2000PK-EL PARTS KIT INCLUDES

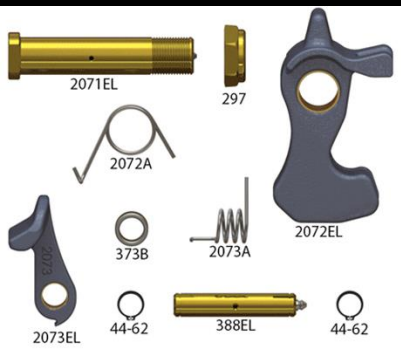

PART #	DESC.
44-62	SNAP RING
297	LOCK NUT
373B	SPACER
388EL	PIN
2071EL	BOLT
2072EL	LATCH
2072A	SPRING
2072B	BUSHING
2073EL	LATCH LOCK

MODEL: 480

MAXIMUM GROSS TRAILER WEIGHT:	130,000LBS	58,966KG
MAXIMUM TONGUE WEIGHT:	21,000LBS	9,525KG
ULTIMATE LATCH CAPACITY:	30,000LBS	13,607KG
MAXIMUM EYE X-SECTION:	1 13/16”	46MM
MINIMUM EYE OPENING:	2 3/8”	60MM
UNIT WEIGHT:	34.5LBS	15.6KG

COUPLING ONLY:
480

STANDARD INSTALLATION DRAWING

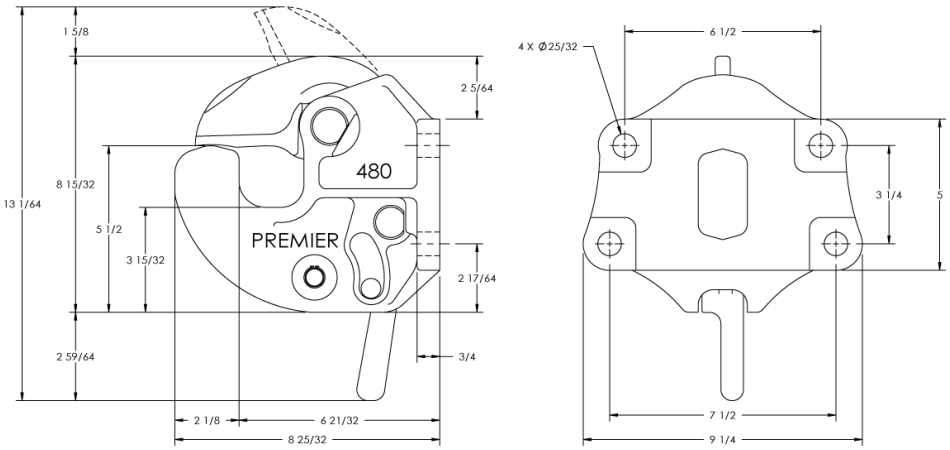

MODEL PARTS AVAILABLE

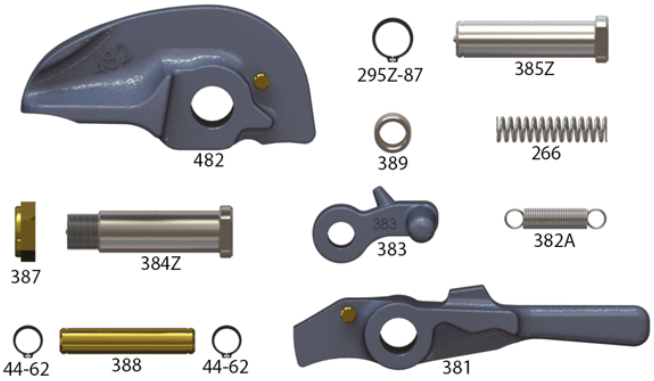

PART #	DESC.
44-62	SNAP RING
266	SPRING
295Z-87	SNAP RING
381	HANDLE
382A	SPRING
383	LEVER
384Z	BOLT
385Z	PIN
387	LOCKNUT
388	PIN
389	SPACER
382	LATCH

INSPECTION AND MAINTENANCE

Whether you use premier jacks, couplins, drawbar eyes, hinge assemblies or any other premier product, regular inspection nad maintenance are essential for proper function, keeping repair costs to a minimunm and above all, safe and efficient operation.

As part of our effort to assist you, premier has developed serviceability gages (picture at right) that help judge the useful life of each of our major product lines that help guide you through inspection, routine maintenance and part replacemnt, another resouce is our world wide web site at www.premier-mfg.com here you will find service guides, installation guides, distributor locations and links to trucking resources.

BOLT KITS

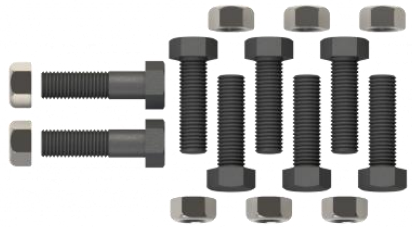

These individually packaged bolt kits make the hardware selection for your coupling and/or drawbar eye fast and easy.

Bolts kits 501 through 508 use coarse threaded Grade-8 fasteners and Grade-C crimp style locknuts for a strong and secure coupling or drawbar mounting system. Bolt Kit 511 uses coarse threaded L9 Grade bolts. 159 Bolt Kit has fine threaded Grade-8 fasteners

SPECIFICATIONS

PART #	FOR USE WITH:	INCLUDES:	MAXIMUM MOUNTING STRUCTURE THICKNESS
501:	270, 2200, SAF-TITE 100	BOLTS (2) 2 1/2" (2) 2 3/4" LOCKNUTS (4)	1/2" (13MM)
502:	360, 370, 780, 2300, SAF-TITE 100-3	BOLTS (4) 2 1/2" (2) 2 3/4' LOCKNUTS (6)	1/2" (13MM)
503:	127, 127F, 370B, 570, 580J, 2300B	BOLTS (6) 2 1/2" LOCKNUTS (6)	1/2" (13MM)
504:	570	BOLTS (6) 2" LOCKNUTS (6)	1/2" (13MM)
505:	770	BOLTS (5) 2 1/2" (2) 2 3/4" LOCKNUTS (7)	1/2" (13MM)
507:	200, 200L, 300, 480, 580, 590, 690, 690T, 890C	BOLTS (4) 2 3/4" LOCKNUTS (4)	1/2" (13MM)
508:	470, 470H, 2400, 2400H, SAF-TITE 100-4, SAF-TITE 100-4H	BOLTS (6) 2 1/2" (2) 2 3/4" LOCKNUTS (8)	1/2" (13MM)
511:	2880, 880	BOLTS (6) 3 1/2" LOCKNUTS (6)	1 ⅝" (41MM)
*159:	150, 160, 240	BOLTS (4) 2" LOCK WASHER (4) HEX NUT (4)	3/4" (19MM)

***159 KIT HAS FINE THREAD, USES LOCK WASHERS AND STANDARD NUTS**

LOAD SECUREMENT

PART #	DESCRIPTION		PART #	DESCRIPTION	
41691-12	LOOSE FRAME WINCH		43782-15	LOAD LOCK BAR	
43563-10 43579-20	SRD. WELD ON LOW PROFILE WELD ON		TS9 TS15 TS20 TS30 POLY 15B 20B	TARP STRAPS	
43564-14	CLAMP ON WINCH		45943-10	LOAD BINDER	
46564-16	LOW-PRO CLAMP ON WINCH		1008 1147 1500	7/16” RUBBER ROPE ⅝” RUBBER ROPE 3/4” RUBBER ROPE	
48101-14 18101-10	STD3 BAR WINCH LOW PROFILE 3 BAR WINCH		95289 95217	D-RING CLIP	
43565-12 43565-13	SLIDING WINCH LOW PROFILE SLIDING WINCH		89631	C-HOOK	
43795-11-30 43795-10-30	4” x 30’ LOAD BELT “D-RING” 4” x 30’ LOAD BELT FLAT HOOK		WRI120 WRI122 WRI124 WRI126	28’ LOG WRAPPER ‘W’ CHAIN 30’ LOG WRAPPER ‘W’ CHAIN 32’ LOG WRAPPER ‘W’ CHAIN 34’ LOG WRAPPER ‘W’ CHAIN	
45983-43	27’ RATCH & STRAP ASSEMBLY				

HOLLAND HITCH 5TH WHEELS

HOLLAND XA-3501 SERIES TOP PLATE

RK-63501

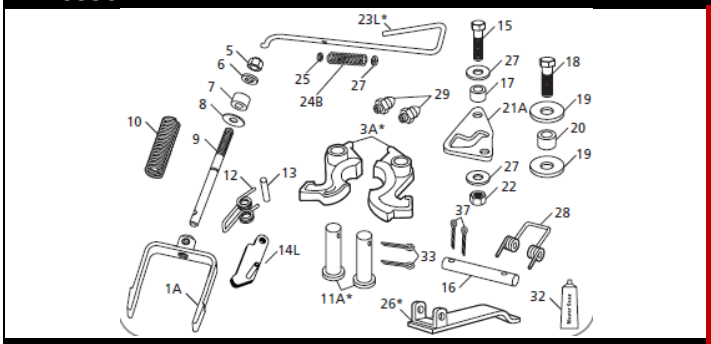

RK-63506

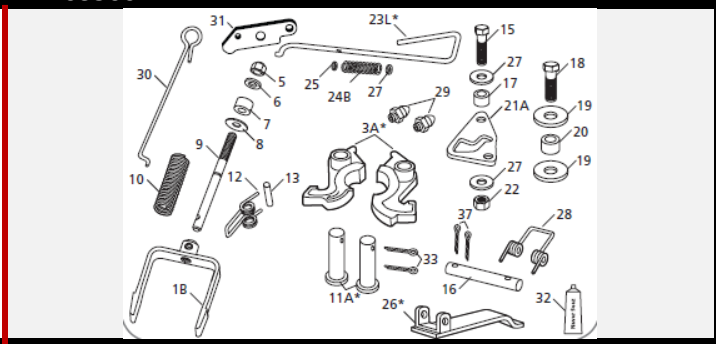

RK-63500

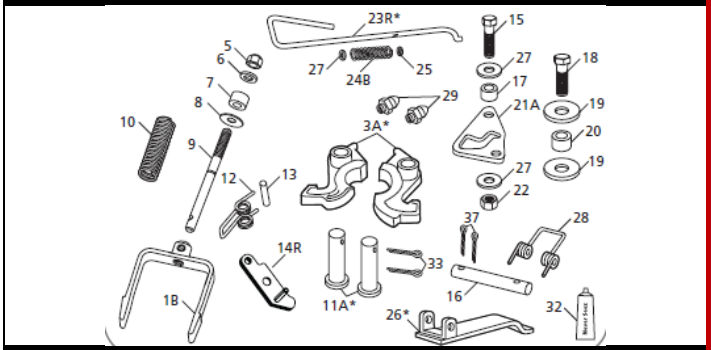

RK-63505

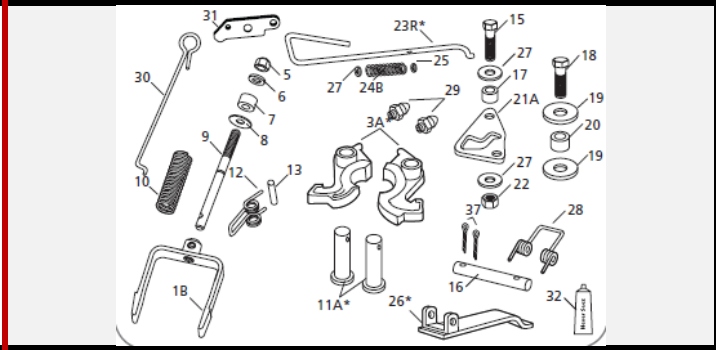

RK-63501 / RK-63500 PARTS LIST

ITEM	DESCRIPTION	PART #	QTY
1A	YOKE	XA-1703-F	1
1B	YOKE	XA-07295-THK	1
3A*	LOCK JAW	XA-1704	1
5	LOCK NUTS 75” – 16 GRC	XB-HNH-34-F	1
6	WASHER, 81”OD X 75”ID	XB-PW-1316-112	1
7	WASHER, RUBBER, 1.5”OD X 75”ID	XB-1127	1
8	TAG, LOCK ADJUSTMENT	XB-02312	1
9	YOKE SHAFT	XB-1706	1
10	SPRING, COMPRESSION	XB-1505	1
11A*	PIN, LOCK	XA-1313	2
12	SPRING, TORSION	XB-2149	1
13	PIN, SPRING, .50” DIA X 2.75” LONG	XB-21-S-500-2750	1
14L	LOCK SECONDARY LEFT-HAND	XA-11992-L	1
14R	LOCK SECONDAY RIGHT –HAND	XA-11992-R	1
15	HHCS, .50” – 20 X 1.75” GR 5	XB-2083	1
16	PIN, .50” DIA X 4.5” LONG	XA-1055	1
17	ROLLER, .52”ID X 1”OD X .38” LONG	XA-1029	1
18	HHCS, .63” – 18 x 1.75” GR 8	XB-CX-F-134	1
19	WASHER, .66”ID X 22.5”OD	XB-1030-1	2
20	ROLLER, .66”ID X 1”OD X 38“ LONG	XA-1507	1
21A	CAM PLATE	XA-1705	1
22	LOCK NUT, .50”-20 GR C	XB-T-69-A	1
23L*	RELEASE HANDLE, LEFT-HAND	XA-1707-M	1
23R*	RELEASE HANDLE, RIGHT-HAND	XA-1707-6	1
24B	SPRING, MANUAL RELEASE	XB-1028-1	1
25	WASHER, .53”ID X 1.06”OD	XB-PW-1732-1-116	1
26*	LOCK GUARD	XA-3514	1
27	WASHER, .56”ID X 1.38”OD	XB-T-49	3
28	SPRING, TORSION	XB-1044	1
29	GREASE ZERK	XB-H-38	2
32	NEVER-SEEZ, 7.5G TUBE	XB-02967	1
33	PIN, COTTER, .25” X 2” LONG	XB-5	2
37	PIN, COTTER, .13” DIA X 1” LONG	XB-16	2

RK-63506 / RK-63505 PARTS LIST

ITEM	DESCRIPTION	PART #	QTY
1B	YOKE	XA-07295-THK	1
3A*	LOCK JAW	XA-1704	1
5	LOCK NUTS 75” – 16 GRC	XB-HNH-34-F	1
6	WASHER, 81”OD X 75”ID	XB-PW-1316-112	1
7	WASHER, RUBBER, 1.5”OD X 75”ID	XB-1127	1
8	TAG, LOCK ADJUSTMENT	XB-02312	1
9	YOKE SHAFT	XB-1706	1
10	SPRING, COMPRESSION	XB-1505	1
11A*	PIN, LOCK	XA-1313	2
12	SPRING, TORSION	XB-2149	1
13	PIN, SPRING, .50” DIA X 2.75” LONG	XB-21-S-500-2750	1
15	HHCS, .50” – 20 X 1.75” GR 5	XB-2083	1
16	PIN, .50” DIA X 4.5” LONG	XA-1055	1
17	ROLLER, .52”ID X 1”OD X .38” LONG	XA-1029	1
18	HHCS, .63” – 18 x 1.75” GR 8	XB-CX-F-134	1
19	WASHER, .66”ID X 22.5”OD	XB-1030-1	2
20	ROLLER, .66”ID X 1”OD X 38“ LONG	XA-1507	1
21A	CAM PLATE	XA-1705	1
22	LOCK NUT, .50”-20 GR C	XB-T-69-A	1
23L*	RELEASE HANDLE, LEFT-HAND	XA-1707-M	1
23R*	RELEASE HANDLE, RIGHT-HAND	XA-1707-6	1
24B	SPRING, MANUAL RELEASE	XB-1028-1	1
25	WASHER, .53”ID X 1.06”OD	XB-PW-1732-1-116	1
26*	LOCK GUARD	XA-3514	1
27	WASHER, .56”ID X 1.38”OD	XB-T-49	3
28	SPRING, TORSION	XB-1044	1
29	GREASE ZERK	XB-H-38	2
30	RELEASE HANDLE, MAN. SEC. LOCK	XA-3542-M	1
31	LOCK, MANUAL SECONDARY	XA-11992	1
32	NEVER-SEEZ, 7.5G TUBE	XB-02967	1
33	PIN, COTTER, .25” X 2” LONG	XB-5	2
37	PIN, COTTER, .13” DIA X 1” LONG	XB-16	2

*NOT SOLD INDIVIDUALLY – MUST BE PURCHASED IN KIT.

RK-63509

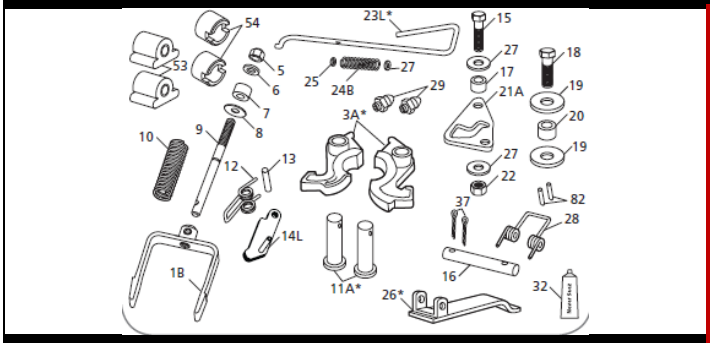

RK-63506

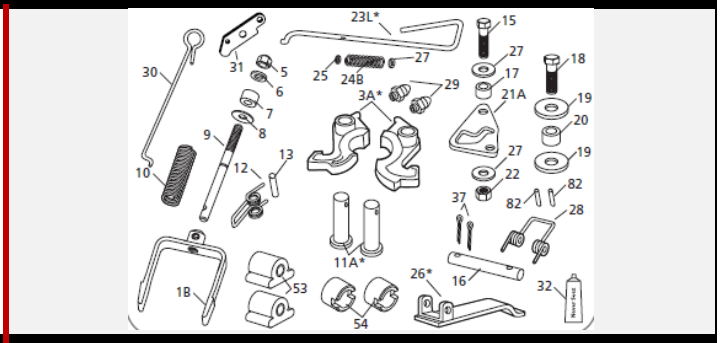

RK-63508

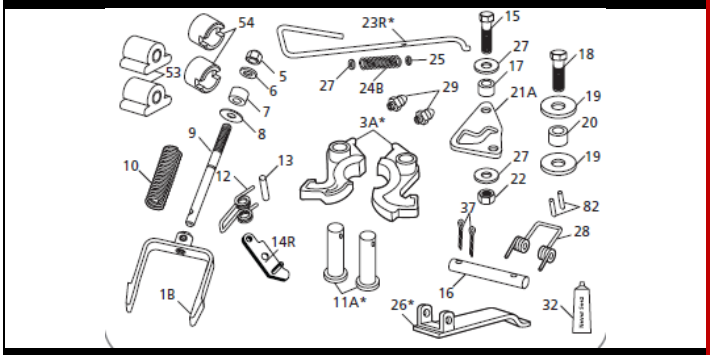

RK-63505

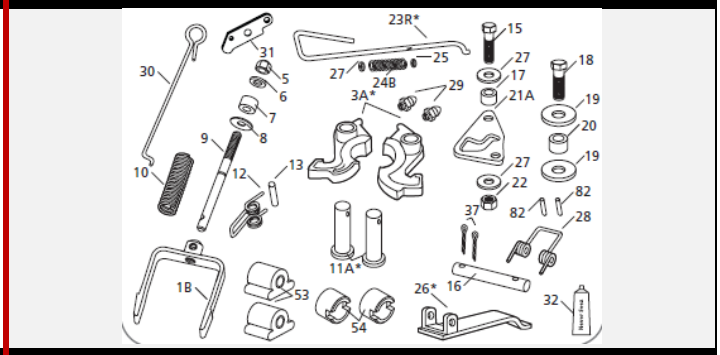

RK-63509 / RK-63508 PARTS LIST

ITEM	DESCRIPTION	PART #	QTY
1B	YOKE	XA-07295-THK	1
3A*	LOCK JAW	XA-1704	1
5	LOCK NUTS 75” – 16 GRC	XB-HNH-34-F	1
6	WASHER, 81”OD X 75”ID	XB-PW-1316-112	1
7	WASHER, RUBBER, 1.5”OD X 75”ID	XB-1127	1
8	TAG, LOCK ADJUSTMENT	XB-02312	1
9	YOKE SHAFT	XB-1706	1
10	SPRING, COMPRESSION	XB-1505	1
11A*	PIN, LOCK	XA-1313	2
12	SPRING, TORSION	XB-2149	1
13	PIN, SPRING, .50” DIA X 2.75” LONG	XB-21-S-500-2750	1
14L	LOCK SECONDARY LEFT-HAND	XA-11992-L	1
14R	LOCK SECONDAY RIGHT –HAND	XA-11992-R	1
15	HHCS, .50” – 20 X 1.75” GR 5	XB-2083	1
16	PIN, .50” DIA X 4.5” LONG	XA-1055	1
17	ROLLER, .52”ID X 1”OD X .38” LONG	XA-1029	1
18	HHCS, .63” – 18 x 1.75” GR 8	XB-CX-F-134	1
19	WASHER, .66”ID X 22.5”OD	XB-1030-1	2
19	WASHER, .66”ID X 22.5”OD	XB-1030-1	2
20	ROLLER, .66”ID X 1”OD X 38“ LONG	XA-1507	1
21A	CAM PLATE	XA-1705	1
22	LOCK NUT, .50”-20 GR C	XB-T-69-A	1
23L*	RELEASE HANDLE, LEFT-HAND	XA-1707-M	1
23R*	RELEASE HANDLE, RIGHT-HAND	XA-1707-6	1
24B	SPRING, MANUAL RELEASE	XB-1028-1	1
25	WASHER, .53”ID X 1.06”OD	XB-PW-1732-1-116	1
26*	LOCK GUARD	XA-3514	1
27	WASHER, .56”ID X 1.38”OD	XB-T-49	3
28	SPRING, TORSION	XB-1044	1
29	GREASE ZERK	XB-H-38	2
32	NEVER-SEEZ, 7.5G TUBE	XB-02967	1
37	PIN, COTTER, .13” DIA X 1” LONG	XB-16	2
53	BUSHING	XA-01241	2
54	BUSHING	XA-01242	2
82	PIN, SPRING, .25” DIA X 1.88” LONG	XB021-S-250-1875	D

RK-63510 / RK-63511 PARTS LIST

ITEM	DESCRIPTION	PART #	QTY
1B	YOKE	XA-07295-THK	1
3A*	LOCK JAW	XA-1704	1
5	LOCK NUTS 75” – 16 GRC	XB-HNH-34-F	1
6	WASHER, 81”OD X 75”ID	XB-PW-1316-112	1
7	WASHER, RUBBER, 1.5”OD X 75”ID	XB-1127	1
8	TAG, LOCK ADJUSTMENT	XB-02312	1
9	YOKE SHAFT	XB-1706	1
10	SPRING, COMPRESSION	XB-1505	1
11A*	PIN, LOCK	XA-1313	2
12	SPRING, TORSION	XB-2149	1
13	PIN, SPRING, .50” DIA X 2.75” LONG	XB-21-S-500-2750	1
15	HHCS, .50” – 20 X 1.75” GR 5	XB-2083	1
16	PIN, .50” DIA X 4.5” LONG	XA-1055	1
17	ROLLER, .52”ID X 1”OD X .38” LONG	XA-1029	1
18	HHCS, .63” – 18 x 1.75” GR 8	XB-CX-F-134	1
19	WASHER, .66”ID X 22.5”OD	XB-1030-1	2
20	ROLLER, .66”ID X 1”OD X 38“ LONG	XA-1507	1
21A	CAM PLATE	XA-1705	1
22	LOCK NUT, .50”-20 GR C	XB-T-69-A	1
23L*	RELEASE HANDLE, LEFT-HAND	XA-1707-M	1
23R*	RELEASE HANDLE, RIGHT-HAND	XA-1707-6	1
24B	SPRING, MANUAL RELEASE	XB-1028-1	1
25	WASHER, .53”ID X 1.06”OD	XB-PW-1732-1-116	1
26*	LOCK GUARD	XA-3514	1
27	WASHER, .56”ID X 1.38”OD	XB-T-49	3
28	SPRING, TORSION	XB-1044	1
29	GREASE ZERK	XB-H-38	2
30	RELEASE HANDLE, MAN. SEC. LOCK	XA-3542-M	1
31	LOCK, MANUAL SECONDARY	XA-11992	1
32	NEVER-SEEZ, 7.5G TUBE	XB-02967	1
37	PIN, COTTER, .13” DIA X 1” LONG	XB-16	2
53	BUSHING	XA-01241	2
54	BUSHING	XA-01242	2
82	PIN, SPRING, .25”DIA X 1.88” LONG	XB-21-S-250-1872	2

***NOT SOLD INDIVIDUALLY – MUST BE PURCHASED IN KIT.**

HOLLAND XA-351 SERIES TOP PLATE

RK-351-A

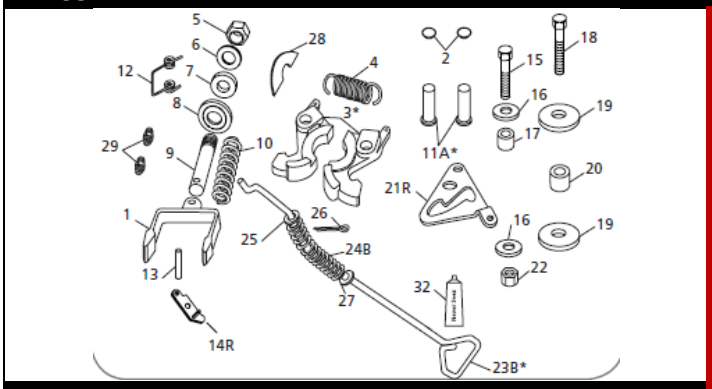

RK-351-A-02

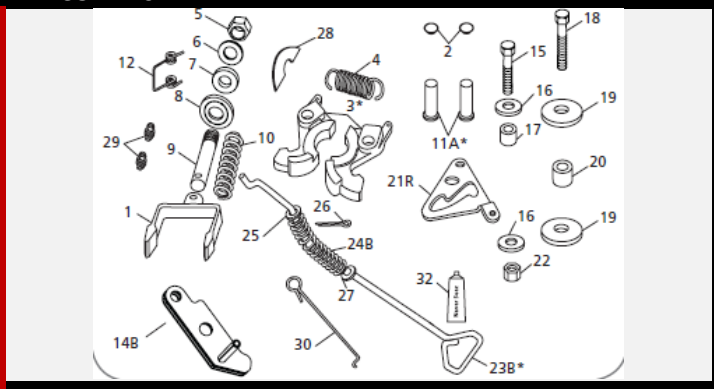

RK-351-A-L

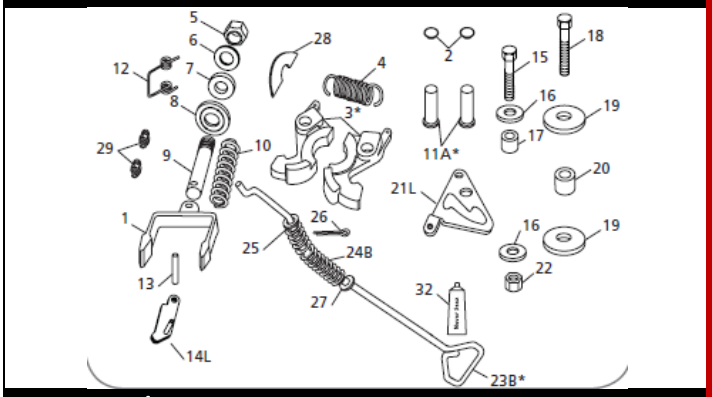

RK-351-1-02-L

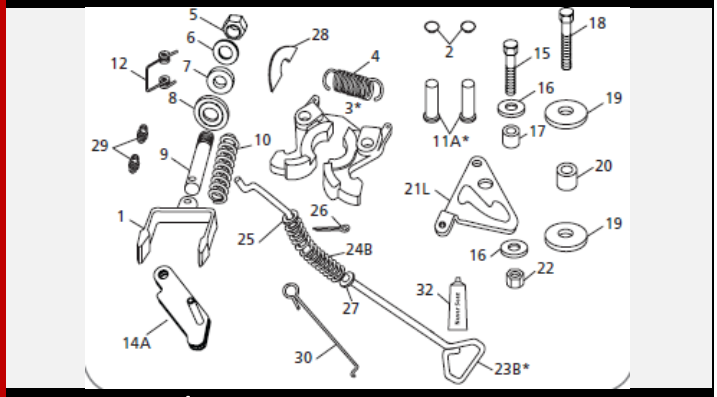

RK-351-A / RK-351-A-L PARTS LIST

ITEM	DESCRIPTION	PART #	QTY
1	YOKE	XA-07295	1
2	RETAINING RING, 1" DIA	XB-07398	2
3*	LOCK JAW SET	XA-07296	1
4	SPING, EXTENSION	XB-07628	1
5	LOCK NUT, .75"-16 GR C	XB-HNH-34-F	1
6	WASHER, 81"ID X 1.47"OD	XB-PW-1316-112	1
7	WASHER,RUBBER, 1.50"OD X .75"ID	XB-1127	1
8	TAG, LOCK ADJUSTMENT	XB-02312	1
9	YOKE SHAFT	XB-1706	1
10	SPRING, COMPRESSION	XB-1505	1
11A*	PIN, LOCK, STANDARD	XA-07292-1	2
12	SPRING, TORSION	XB-2149	1
13	PIN, SPRING, .50" DIA X 2.75" LONG	XB-21-S-500-2750	1
14L	LOCK SECONDARY LEFT-HAND	XA-11992-L	1
14R	LOCK SECONDAY RIGHT –HAND	XA-11992-R	1
15	HHCS, .50" – 20 X 1.75" GR 5	XB-2083	1
16	PIN, .50" DIA X 4.5" LONG	XA-1055	1
17	ROLLER, .52"ID X 1"OD X .38" LONG	XA-1029	1
18	HHCS, .63" – 18 x 1.75" GR 8	XB-CX-F-134	1
19	WASHER, .66"ID X 22.5"OD	XB-1030-1	2
20	ROLLER, .66"ID X 1"OD X 38" LONG	XA-1507	1
21L	CAM PLATE, LEFT HAND	XA-07150-L	1
21R	CAM PLATE, RIGHT HAND	XA-07150-R	1
22	LOCK NUT, .50"-20 GR C	XB-T-69-A	1
23B*	RELEASE HANDLE, L&R HAND	XA-07151-1	1
24B	SPRING, MANUAL RELEASE	XB-1028-1	1
25	WASHER, .53"ID X 1.06"OD	XB-PW-1732-1-116	1
26	COTTER PIN, .13" X 1.25" LONG	XB-07508	1
27	WASHER, .56"ID X 1.38"OD	XB-T-49	3
28	SPRING, TORSION	XB-1044	1
29	GREASE ZERK	XB-H-38	2
32	NEVER-SEEZ, 7.5G TUBE	XB-02967	1

RK-351-A-02 / RK-351-1-02-L PARTS LIST

ITEM	DESCRIPTION	PART #	QTY
1	YOKE	XA-07295	1
2	RETAINING RING, 1" DIA	XB-07398	2
3*	LOCK JAW SET	XA-07296	1
4	SPING, EXTENSION	XB-07628	1
5	LOCK NUT, .75"-16 GR C	XB-HNH-34-F	1
6	WASHER, 81"ID X 1.47"OD	XB-PW-1316-112	1
7	WASHER,RUBBER, 1.50"OD X .75"ID	XB-1127	1
8	TAG, LOCK ADJUSTMENT	XB-02312	1
9	YOKE SHAFT	XB-1706	1
10	SPRING, COMPRESSION	XB-1505	1
11A*	PIN, LOCK, STANDARD	XA-07292-1	2
12	SPRING, TORSION	XB-2149	1
15	HHCS, .50" – 20 X 1.75" GR 5	XB-2083	1
16	PIN, .50" DIA X 4.5" LONG	XA-1055	2
17	ROLLER, .52"ID X 1"OD X .38" LONG	XA-1029	1
18	HHCS, .63" – 18 x 1.75" GR 8	XB-CX-F-134	1
19	WASHER, .66"ID X 22.5"OD	XB-1030-1	2
20	ROLLER, .66"ID X 1"OD X 38" LONG	XA-1507	1
21L	CAM PLATE, LEFT HAND	XA-07150-L	1
21R	CAM PLATE, RIGHT HAND	XA-07150-R	1
22	LOCK NUT, .50"-20 GR C	XB-T-69-A	2
23B*	RELEASE HANDLE, L&R HAND	XA-07151-1	1
24B	SPRING, MANUAL RELEASE	XB-1028-1	1
25	WASHER, .53"ID X 1.06"OD	XB-PW-1732-1-116	1
26	PIN, COTTER, .13" X 1.25" LONG	XB-07508	1
27	WASHER, .56"ID X 1.38"OD	XB-T-49	1
28	TAG, OPERATION	XB-07610	1
29	GREASE ZERK	XB-H-38	2
30	RELEASE HANDLE, MAN. SEC. LOCK	XA-3542-M-P	1
31A	LOCK, S/A SECONDARY	XA-11992-L	1
31B	LOCK, S/A SECONDARY	XA-11992-R	1
32	NEVER-SEEZ, 7.5G TUBE	XB-02967	1

*NOT SOLD INDIVIDUALLY – MUST BE PURCHASED IN KIT.

RK-351-A-80-L

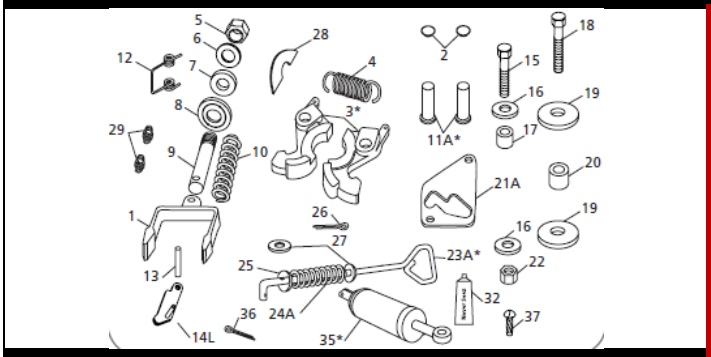

RK-351-A-14

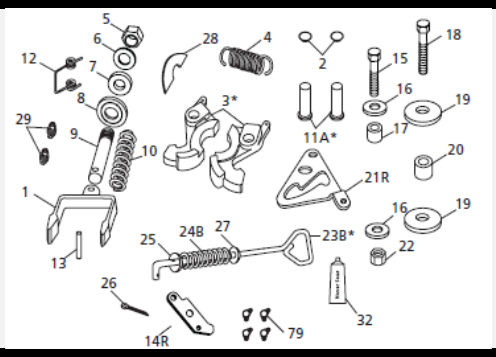

RK-351-A-1A-L

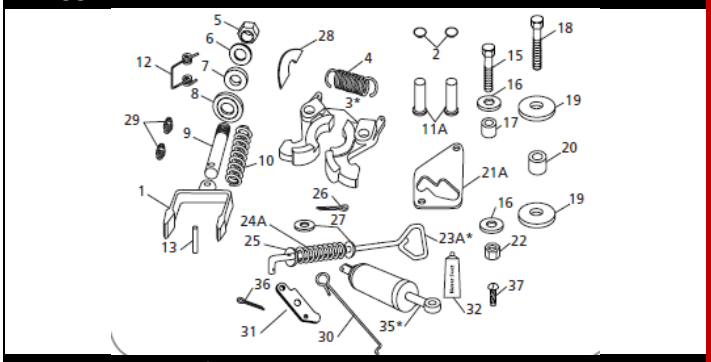

RK-351-A-14-L

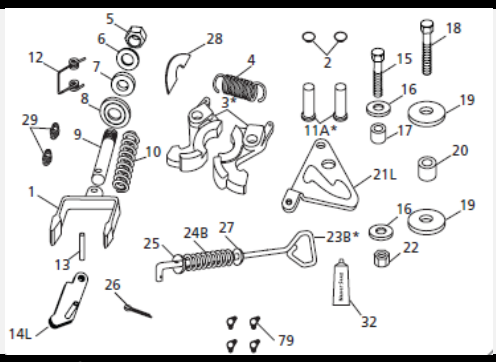

RK-351-A-80-L / RK-351-A-1A-L PARTS LIST

ITEM	DESCRIPTION	PART #	QTY
1	YOKE	XA-07295	1
2	RETAINING RING, 1” DIA	XB-07398	2
3*	LOCK JAW SET	XA-07296	1
4	SPING, EXTENSION	XB-07628	1
5	LOCK NUT, .75”-16 GR C	XB-HNH-34-F	1
6	WASHER, 81”ID X 1.47”OD	XB-PW-1316-112	1
7	WASHER,RUBBER, 1.50”OD X .75”ID	XB-1127	1
8	TAG, LOCK ADJUSTMENT	XB-02312	1
9	YOKE SHAFT	XB-1706	1
10	SPRING, COMPRESSION	XB-1505	1
11A*	PIN, LOCK, STANDARD	XA-07292-1	2
12	SPRING, TORSION	XB-2149	1
13	PIN, SPRING, .50” DIA X 2.75” LONG	XB-21-S-500-2750	1
14L	LOCK SECONDARY LEFT-HAND	XA-11992-L	1
15	HHCS, .50” – 20 X 1.75” GR 5	XB-2083	1
16	PIN, .50” DIA X 4.5” LONG	XA-1055	2
17	ROLLER, .52”ID X 1”OD X .38” LONG	XA-1029	1
18	HHCS, .63” – 18 x 1.75” GR 8	XB-CX-F-134	1
18	HHCS, .63” – 18 x 1.75” GR 8	XB-CX-F-134	1
19	WASHER, .66”ID X 22.5”OD	XB-1030-1	2
20	ROLLER, .66”ID X 1”OD X 38“ LONG	XA-1507	1
21A	CAM PLATE, AIR RELEASE	XA-1705	1
22	LOCK NUT, .50”-20 GR C	XB-T-69-A	1
23A*	RELEASE HANDLE, AIR RELEASE	XA-07766-1	1
24A	SPRING, AIR RELEASE	XB-07974	1
25	WASHER, .53”ID X 1.06”OD	XB-PW-1732-1-116	1
26	COTTER PIN, .13” X 1.25” LONG	XB-07508	1
27	WASHER, .56”ID X 1.38”OD	XB-T-49	3
28	SPRING, TORSION	XB-1044	1
29	GREASE ZERK	XB-H-38	2
30	RELEASE HANDLE, MAN. SEC. LOCK	XA-3542-M-P	1
31	LOCK, MANUAL SECONDARY	XA-11992	1
32	NEVER-SEEZ, 7.5G TUBE	XB-02967	1
35*	AIR RELEASE CULINDER ASSEMBLY	XA-2524-R-16-L	1
36	PIN, COTTER, .19”DIA X 1.25” LONG	XB-06336	1
37	DRIVE SCREW, #12 X .75” LONG	XB-09155	1

RK-351-A-14 / RK-351-A-14-L

ITEM	DESCRIPTION	PART #	QTY
1	YOKE	XA-07295	1
2	RETAINING RING, 1” DIA	XB-07398	2
3*	LOCK JAW SET	XA-07296	1
4	SPING, EXTENSION	XB-07628	1
5	LOCK NUT, .75”-16 GR C	XB-HNH-34-F	1
6	WASHER, 81”ID X 1.47”OD	XB-PW-1316-112	1
7	WASHER,RUBBER, 1.50”OD X .75”ID	XB-1127	1
8	TAG, LOCK ADJUSTMENT	XB-02312	1
9	YOKE SHAFT	XB-1706	1
10	SPRING, COMPRESSION	XB-1505	1
11A*	PIN, LOCK, STANDARD	XA-07292-1	2
12	SPRING, TORSION	XB-2149	1
13	PIN, SPRING, .50” DIA X 2.75” LONG	XB-21-S-500-2750	1
14L	LOCK SECONDARY LEFT-HAND	XA-11992-L	1
14R	LOCK SECONDARY RIGHT-HAND	XA-11992-R	1
15	HHCS, .50” – 20 X 1.75” GR 5	XB-2083	1
16	PIN, .50” DIA X 4.5” LONG	XA-1055	1
17	ROLLER, .52”ID X 1”OD X .38” LONG	XA-1029	1
18	HHCS, .63” – 18 x 1.75” GR 8	XB-CX-F-134	1
19	WASHER, .66”ID X 22.5”OD	XB-1030-1	2
20	ROLLER, .66”ID X 1”OD X 38“ LONG	XA-1507	1
21L	CAM PLATE, LEFT-HAND	XA-07150-L-P	1
21R	CAM PLATE, RIGHT-HAND	XA-07150-R-P	1
22	LOCK NUT, .50”-20 GR C	XB-T-69-A	1
23B*	RELEASE HANDLE, BOTH L&R	XA-07151-1	1
24B	SPRING, MANUAL RELEASE	XB-07291	1
25	WASHER, .53”ID X 1.06”OD	XB-PW-1732-1-116	1
26	COTTER PIN, .13” X 1.25” LONG	XB-07508	1
27	WASHER, .56”ID X 1.38”OD	XB-T-49	3
28	SPRING, TORSION	XB-1044	1
29	GREASE ZERK	XB-H-38	2
32	NEVER-SEEZ, 7.5G TUBE	XB-02967	1
79	FITTINGS, GREASE, 45”	XB-H-38-C	1

***NOT SOLD INDIVIDUALLY – MUST BE PURCHASED IN KIT.**

RK-351-A-28-L

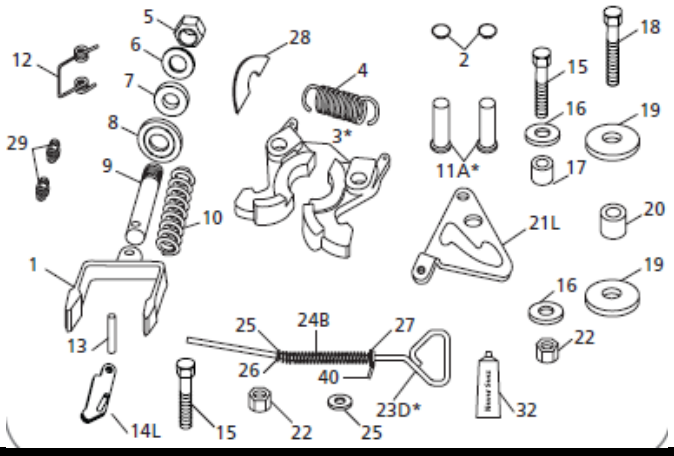

RK-351-A-28-L PARTS LIST

ITEM	DESCRIPTION	PART #	QTY	ITEM	DESCRIPTION	PART #	QTY
1	YOKE	XA-07295	1	17	ROLLER, .52”ID X 1”OD X .38” LONG	XA-1029	1
2	RETAINING RING, 1” DIA	XB-07398	2	18	HHCS, .63” – 18 x 1.75” GR 8	XB-CX-F-134	1
3*	LOCK JAW SET	XA-07296	1	19	WASHER, .66”ID X 22.5”OD	XB-1030-1	2
4	SPING, EXTENSION	XB-07628	1	20	ROLLER, .66”ID X 1”OD X 38“ LONG	XA-1507	1
5	LOCK NUT, .75”-16 GR C	XB-HNH-34-F	1	21L	CAM PLATE, LEFT-HAND	XA-07150-L-P	1
6	WASHER, 81”ID X 1.47”OD	XB-PW-1316-112	1	22	LOCK NUT, .50”-20 GR C	XB-T-69-A	1
7	WASHER,RUBBER, 1.50”OD X .75”ID	XB-1127	1	23D*	RELEASE HANDLE, DOLLY	XA-09962	1
8	TAG, LOCK ADJUSTMENT	XB-02312	1	24B	SPRING, MANUAL RELEASE	XB-07291	1
9	YOKE SHAFT	XB-1706	1	25	WASHER, .53”ID X 1.06”OD	XB-PW-1732-1-116	1
10	SPRING, COMPRESSION	XB-1505	1	26	COTTER PIN, .13” X 1.25” LONG	XB-07508	1
11A*	PIN, LOCK, STANDARD	XA-07292-1	2	27	WASHER, .56”ID X 1.38”OD	XB-T-49	3
12	SPRING, TORSION	XB-2149	1	28	SPRING, TORSION	XB-1044	1
13	PIN, SPRING, .50” DIA X 2.75” LONG	XB-21-S-500-2750	1	29	GREASE ZERK	XB-H-38	2
14L	LOCK SECONDARY LEFT-HAND	XA-11992-L	1	32	NEVER-SEEZ, 7.5G TUBE	XB-02967	1
15	HHCS, .50” – 20 X 1.75” GR 5	XB-2083	1	40	RELEASE HANDLE PLATE, DOLLY	XA-09963	1
16	PIN, .50” DIA X 4.5” LONG	XA-1055	1	*NOT SOLD INDIVIDUALLY – MUST BE PURCHASED IN KIT.			

JOST 5TH WHEEL

FIELD REPLACMENT FOR HOLLAND TOP PLATES

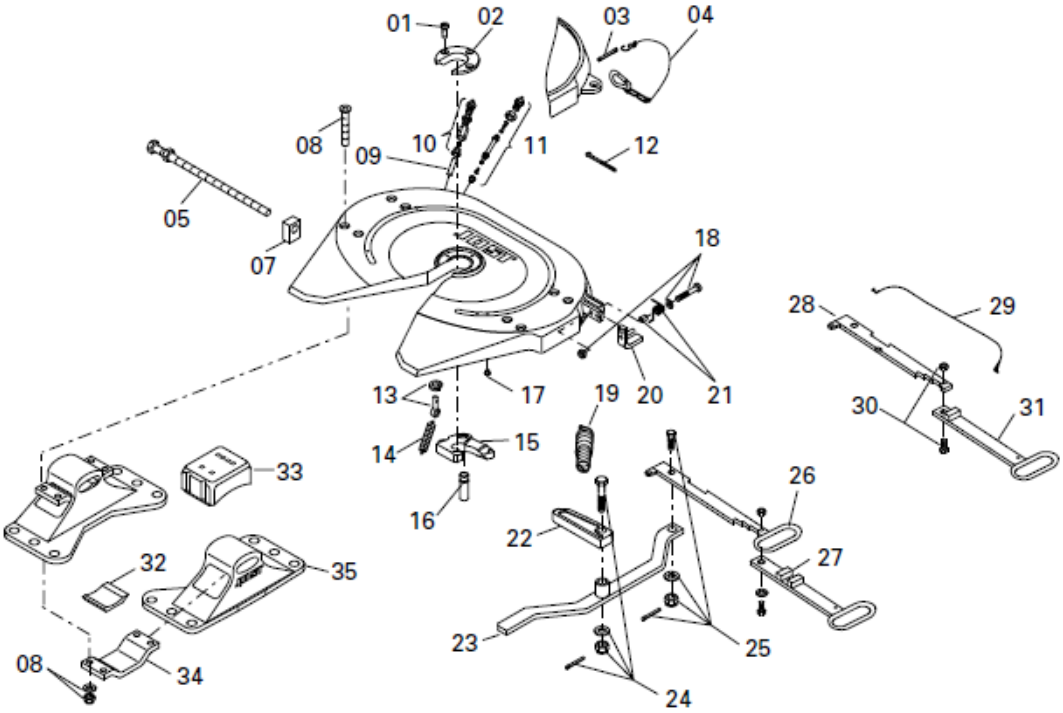

ITEM	DESCRIPTION	PART #	QTY	ITEM	DESCRIPTION	PART #	QTY
01	SOCKET HEAD BOLT	SK 2121-07	3	20	LATCH	SK 3121-52	1
02	WEARING RING	SK 2105-09	1	21	SPRING NOOSE	SK 3121-59	1
03	SPLIT PIN	SK 1974	1	22	LOCKING BOLT	SK 3205-06	1
04	SPRING HOOK	SK 1436	1	23	LEVER	SK 3105-18	1
05	ADJUSTING SCREW	SK 3105-150	1	24	BAR BOLT	SK 3221-01	1
07	GUIDE	SK 3205-07	1	25	HEXAGON BOLT	SK 1513	1
08	COUNTERSUNK BOLT	SK 2121-15	8	26	HANDLE	SK 3105-15	1
09	LUBRICATION TUBE	SK 1989	1	27	HANDLE EXTENSION		1
10	NUT AND BOLT	SK 1976	1	28	LOCKING BAR	SK 3105-115	1
11	LUBRICATION TUBE	SK 3108-02	1	29	LATCH CORD	SK 3521-02	1
12	CABLE TIE	SK 3121-13	1	30	HEXAGON BOLT	SK 2421-50	1
13	EYE BOLT	SK 2122.04	1	31	HANDLE	SK 3105-113	1
14	TENSION SPRING	SK 847	1	32	RUBBER CUSHION, LOWER	SK 2105-25	2
15	LOCK JAW	SK 1489 Z	1	33	RUBBER CUSHION, UPPER	SK 1259	2
16	BOLT	SK 2106-67	1	34	BRIDGE	SK 1372	2
17	THREADED STOPPER	000.010.021	4	35	PEDESTAL H 150	SK 2104-02	2
18	HEXAGON BOLT	SK 3521-03	1	35	PEDESTAL H 185	SK 2104-01	2
19	DOUBLE TENSION SPRING	SK 3105-20	1	35	PEDESTAL H 250	SK 2104-14	2
				35	PEDESTAL H 300	SK 2104-20	2

REPAIR AND RETROFIT KITS

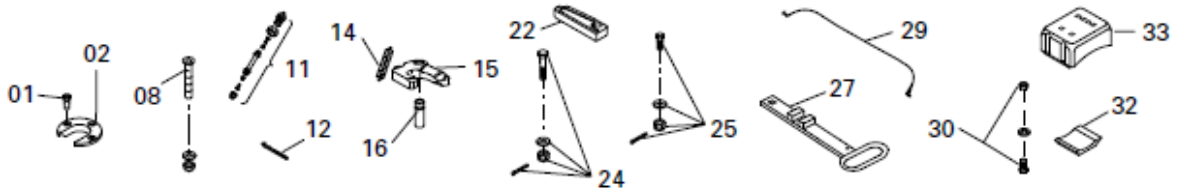

ITEM	DESCRIPTION	PART #	ITEM	DESCRIPTION	PART #
01, 02, 14, 15, 16	REPAIR KIT FOR LOCK TYPE C	SK 3221-50	11, 14, 15, 16	REPAIR KIT FOR LOCK TYPE CZ	SK 3221-52 Z
14, 15, 16	REPAIR KIT FOR LOCK TYPE C	SK 3221-52	08, 32, 33	REPAIR KIT FOR BEARING	SK 2121-69
01, 02	REPAIR KIT FOR LOCK TYPE C/CZ	SK 2121-51	11, 15	RETROFIT KIT FOR TYPE C ON CZ	SK 3108-05
01, 02, 11, 14, 15, 16	REPAIR KIT FOR LOCK TYPE CZ	SK 3221-50 Z	27, 29, 30	RETROFIT KIT HAND EXTENSION	SK 3121-063
			01, 02, 11, 12, 14, 15, 16, 22, 24, 25	REPAIR KIT FOR LOCK	SK 3121-072 Z

Check out our new website at www.peerless.ca

PEERLESS®

1944 75th Anniversary 2019

575 PAGE AVE, PENTICTON, BC V2A 6P3
P: 250-492-0408 Ext 1 ~ TF: 1-866-657-2662 Ext. 1
parts@peerless.ca ~ *www.peerless.ca*

2019 1st Print